# Low Impact Development and Stormwater Manual for the Town of Newington

November 2013

FUSS & O'NEILL

146 Hartford Road
Manchester, CT 06040

Planimetrics

70 County Road
Simsbury, CT 06070

# Low Impact Development and Stormwater Manual for the Town of Newington

November 2013


Acknowledgements

Fuss & O'Neill, Inc.

M. James Riordan, AICP, LEED AP
Erik V. Mas, PE

Planimetrics

Glenn Chalder, AICP

Low Impact Development Land Use Committee

Philip Block – Conservation Commission Chairman
Cathleen Hall – Planning and Zoning Commissioner
Craig Minor, AICP – Town Planner
Christopher Greenlaw, PE – Town Engineer

This project was partially funded through a Supplemental Environmental Project (SEP) of the Connecticut Department of Energy and Environmental Protection (CTDEEP). SEP funding originates during settlement of environmental enforcement actions undertaken by the CTDEEP to amend the adverse public health and/or environmental impacts of violations.


20130123.A10

# Table of Contents

## Low Impact Development and Stormwater Manual for the Town of Newington


1 Introduction ..... 1
1.1 Purpose of the Manual ..... 1
1.2 Organization of the Manual ..... 1
1.3 How to Use this Manual ..... 1
1.4 What is Low Impact Development ..... 2

2 Stormwater Management Standards ..... 4
2.1 Standards ..... 4
2.2 Applicability ..... 12
2.2.1 General Applicability ..... 12
2.2.2 New Development and Redevelopment ..... 13
2.2.3 Existing Development ..... 13

3 LID Planning and Design Process ..... 14
3.1 Basic Planning Principles ..... 15
3.2 Site Planning and Design Process ..... 17

4 Use of LID Management Practices ..... 22
4.1 LID in Residential Settings ..... 22
4.2 LID for Existing Residential Areas ..... 23
4.2.1 Residential Stormwater Management Overview ..... 23
4.2.2 Avoid, Reduce, and Manage Stormwater Impacts ..... 23
Five Steps for Siting BMPs on Existing Residential Lots ..... 24
4.3 LID for High Density Industrial, Commercial and Residential Development ..... 27
4.4 LID Roadway Designs ..... 29
4.4.1 Open Section Roadways ..... 29
4.4.2 Cul-De-Sac Designs ..... 31
4.4.3 Divided Highways ..... 31
4.4.4 Highly Urbanized LID Street Design ..... 32
4.4.5 Porous Surfaces ..... 33
4.4.6 Other LID Roadway Design Considerations ..... 34
4.5 Retrofit Case Studies ..... 34
4.5.1 LID Retrofits in Connecticut ..... 35
4.5.2 Water Quality LID Retrofits in Urbanized Residential Areas ..... 37
4.5.3 Flood Management with LID ..... 37

5 Design Standards for Low Impact Development Controls ..... 39
5.1 Approaches that Optimize Conservation ..... 39
5.1.1 Limits of Clearing and Grading ..... 39
5.1.2 Preserving Natural Areas ..... 41

5.2 Approaches that Mimic Natural Water Balance ..... 45
5.3 Approaches to Minimizing and Disconnecting Impervious Surface ..... 50
5.3.1 Roadways ..... 50
5.3.2 Buildings ..... 53
5.3.3 Parking Footprints ..... 55
5.3.4 Parking Lot Islands ..... 57
5.3.5 Porous Surfaces ..... 58
5.3.6 Disconnecting Impervious Areas ..... 60
5.4 Using Management Practices at the Source ..... 63
5.4.1 Vegetated Filter Strips ..... 63
5.4.2 Natural and Vegetated Drainage Ways ..... 64
5.4.3 Green Roofs and Facades ..... 65
5.4.4 Rainwater Harvesting ..... 72
5.4.5 Dry Wells ..... 74
5.4.6 Bioretention, Rain Gardens and Tree Box Filters ..... 75
5.4.7 Infiltration Trenches ..... 77
5.4.8 Subsurface Gravel Wetlands ..... 78

6 References ..... 84

Tables — Page

2.1 Recharge Depth by Hydrologic Soil Group 7
2.2 Example Applicability of Newington's Stormwater Standards 12
4.1 Do-It-Yourself BMP Sizing Examples 26
4.2 General Guidance for Narrower Roadways 31
5.1 Ratio of Forested Buffer to Impervious Surface Runoff for Precipitation between 0.5 and 1.0 Inches 45
5.2 Hydrologic Benefits of Nonstructural and Distributed Techniques and Controls 49
5.3 Roadway Design Standards for Five Street Types 52
5.4 Recommended Maximum Number of Parking Spaces for Certain Land Uses 56
5.5 Ratio of Open Space: Previous Area Necessary to Attenuate Surface Runoff for Runoff between 0.5 and 1.0 Inches 61
5.6 Typical Maintenance Activities for Rooftop Runoff Structures 72
5.7 Design Criteria for Gravel Wetlands 80

Figures — Page

3.1 Conventional Controls 14
3.2 LID Controls 15
3.4 Optimizing the use of green space 18
3.5 Contrasting runoff patterns in conventional and LID design 19

# Table of Contents

## Low Impact Development and Stormwater Manual for the Town of Newington


| | | |
|---|---|---|
| 3.6 | LID techniques at the lot level | 17 |
| 4.1 | Schematic of engineered practices | 22 |
| 4.2 | Five steps for siting retrofit BMPs on individual | 23 |
| 4.3 | Treating a rooftop with disconnection | 25 |
| 4.4 | LID design strategies for office buildings, small commercial buildings, and big box sites | 23 |
| 4.5 | Schematic example of engineered practices in an urban retrofit streetscape | 28 |
| 4.6 | Open section roadways | 29 |
| 4.7 | Narrow road section with sidewalks, shallow swale and porous pavement shoulders | 30 |
| 4.8 | Swale design to enhance its ability to filter and infiltrate runoff | 30 |
| 4.9 | Cul-de-sac designs | 31 |
| 4.10 | Examples of center median infiltration/filtration systems | 32 |
| 4.11 | Shoulder Treatment Systems using detention and filtration design | 32 |
| 4.12 | Examples of planter box designs in high density development | 33 |
| 4.13 | Porous surfaces | 33 |
| 4.14 | Permeable pavement and rain garden/bioretention retrofits along North Main Street in Bridgeport, CT | 35 |
| 4.15 | Green roof on subsurface building at Hartford Green Capitols Project | 35 |
| 4.16 | Construction of a rain garden at Hartford Green Capitols Project. | 35 |
| 4.17 | Permeable pavement at Hartford Green Capitols Project. | 36 |
| 4.18 | Retrofit and redevelopment techniques in Connecticut | 36 |
| 4.19 | Before-and-after rendering of a green street retrofit for Water Street | 37 |
| 4.20 | Storm drains in the Shandon Neighborhood are undersized to handle significant rain events | 37 |
| 5.1 | Reduced limits of disturbance minimize water quality impacts | 40 |
| 5.2 | Site map with natural areas delineated | 42 |
| 5.3 | Riparian buffer along the French River in Thompson, CT | 42 |
| 5.4 | Three-zone riparian buffer | 43 |
| 5.5 | Rock trench level spreader for low flows | 44 |
| 5.6 | Alternative roadway design in Waterford, CT | 50 |
| 5.7 | Different Styles of turnarounds | 51 |
| 5.8 | Cul-de-sac infiltration island accepts stormwater from surrounding pavement | 51 |
| 5.9 | Reduced road widths | 51 |
| 5.10 | Reduced side yards | 54 |
| 5.11 | Examples of nontraditional lot designs | 54 |
| 5.12 | Parking deck – New Haven, CT | 56 |
| 5.13 | Biorention in a parking lot island in Branford, CT | 57 |
| 5.14 | Parking lot with integrated functional parking islands | 57 |
| 5.15 | Permeable pavement | 58 |
| 5.16 | Standards for disconnecting impervious surface via sheet flow | 59 |

# Table of Contents

## Low Impact Development and Stormwater Manual for the Town of Newington


| Figures | | Page |
|---|---|---|
| 5.17 | Standards for disconnecting impervious surface via downspouts | 62 |
| 5.18 | Vegetative filter strip | 62 |
| 5.19 | Drawing of a vegetative filter strip | 63 |
| 5.20 | Vegetated drainage way | 64 |
| 5.21 | Aetna Building, Hartford, CT | 64 |
| 5.22 | Roof ponding rings | 65 |
| 5.23 | Example Vegetated Rooftop Cross-section | 70 |
| 5.24 | Example of a rain barrel | 72 |
| 5.25 | Schematic of drywell with optional sump to facilitate cleanout | 73 |
| 5.26 | Bioretention at University of Connecticut Storrs Campus | 74 |
| 5.27 | Rain garden | 75 |
| 5.28 | Diagram of a tree box filter | 75 |
| 5.29 | Photograph of a tree box filter | 76 |
| 5.30 | Photograph of an infiltration trench | 76 |
| 5.31 | Photograph of subsurface gravel wetlands | 77 |
| 5.32 | Schematic of subsurface gravel wetlands. Source: UNHSC | 78 |
| 5.33 | Typical design of a subsurface gravel wetlands | 79 |

| Appendix | | End of Document |
|---|---|---|
| A | Stormwater Drainage Manual—Town of Newington | |
| B | Stormwater Maintenance Declaration | |
| C | UNHSC Design Specifications for Porous Asphalt Pavement and Infiltration Beds | |

# 1 Introduction

## 1.1 Purpose of the Manual

The Town of Newington Low Impact Development and Stormwater Manual (hereinafter, Town LID Manual) provides guidelines for land development activities and stormwater management in the Town of Newington. The manual is applicable to activities involving new development, redevelopment, and existing development, undertaken by private or municipal entities, including projects that are subject to review and approval by Town departments, land use boards, and other agencies. The manual provides guidance for developers, engineers, and local regulatory authorities to design and review projects in a technically sound and consistent manner.

## 1.2 Organization of the Manual

This manual is organized as follows:

- Section 1—describes the purpose, organization and use of the manual; and also provides an introduction to the use and benefits of low impact development (LID).
- Section 2—describes stormwater management standards for new development, redevelopment, and existing development.
- Section 3—describes basic LID planning principles and the recommended site planning and design process.
- Section 4—describes small-scale structural management practices that can be integrated throughout a site to meet the stormwater management standards in a variety of land-use settings.
- Section 5—contains design standards for structural and non-structural LID controls.
- Section 6—provides document references.

## 1.3 How to Use this Manual

This manual is intended to be used in conjunction with other existing stormwater design guidance documents including the Town of Newington *Stormwater Drainage Manual*, the Connecticut Department of Energy and Environmental Protection (CTDEEP) *Connecticut Stormwater Quality Manual* (as amended), and the Connecticut Department of Transportation (CTDOT) *Drainage Manual* (as amended). The Town LID Manual should be used specifically for the planning and design of LID stormwater management practices to augment these other existing stormwater and drainage design guidance documents.

The design practices described in this manual should be implemented by professional engineers licensed to practice in the State of Connecticut. The design engineer is responsible for field investigations, data collection and analysis, and design of stormwater management and drainage facilities based upon the guidance contained in this manual. Stormwater management is an evolving field. Existing stormwater management practices are being refined and new practices are being developed on a regular basis. The Town may periodically amend this manual to reflect new or modified technologies, practices, and regulatory requirements.

## 1.4 What is Low Impact Development

Low Impact Development (LID) is an approach to site development and stormwater management that aims to avoid or mitigate impacts to land and water. LID provides the necessary tools to plan and engineer sites in a manner that mimics predevelopment hydrology, protects water quality by treating runoff and reducing pollutant loads. LID also helps to address urban flooding by retaining flow so as to reduce runoff volume and flow rate.

Traditionally, stormwater has been managed with large, best management practices (BMPs) installed at the low end of development sites using land segments left over after subdividing property. This approach is sometimes referred to as end-of-pipe management and tends to focus on detention to remove sediment and treat stormwater. Experience over the last 30 years demonstrates that conventional end-of-pipe BMPs do not achieve desirable results in many instances.

The limitations of conventional urban stormwater management practices were a major driver for development of LID, which is an alternative and more effective approach. LID strives to combine effective site planning and small-scale structural practices located close to where rainfall lands—often right at the perimeter of impervious surfaces—using distributed retention and infiltration BMPs to mimic undeveloped landscapes. The placement of controls throughout a site increases runoff flow paths and travel time, dramatically reducing runoff volumes by increasing opportunities for infiltration and filtration within landscape features.

LID offers a great deal of flexibility. With appropriate selection, application and design, LID principles and practices can be applied to virtually any land use, soil, and climate. For example, in soils with high infiltration rates (e.g., sandy soils), LID practices can be designed to infiltrate runoff to replenish stream baseflow. On the other hand, in high-density urban areas or retrofit situations, infiltration may not be desirable or practical. Filtration and retention (i.e., capture-and-use) practices may be more appropriate. Furthermore, proponents of LID have learned to design BMPs for application in cold climates such as New England, and these approaches have been incorporated in the standards of this manual.

LID's wide array of small-scale management principles and practices has led to the development of new tools to retrofit existing urban development. Small-scale practices can be integrated into existing green space, streetscapes and parking lots as part of the redevelopment process or through routine maintenance and repair of urban infrastructure. Redevelopment of urban areas using LID techniques can dramatically reduce pollutant loads to receiving waters.

Newington, like many Connecticut communities, places a strong emphasis on the stormwater basics of providing flood control and adequate drainage. The Town recognizes the multiple benefits of a holistic approach to stormwater management through the use of more natural systems and LID techniques. The stormwater management standards contained in this manual reflect the trend in stormwater management toward an integrated approach that combines effective site planning and structural stormwater controls to address the full range of hydrologic and water quality impacts resulting from development.
Though the Town prefers the use of LID, the Town recognizes that the LID approach is not a panacea. Hybrid approaches, which incorporate both conventional and LID practices, may be needed some situations. Notwithstanding, as LID's decentralized practices typically do a better job of reducing

adverse environmental effects than end-of-pipe approaches, so the Town will expect careful consideration of all feasible alternatives prior to selecting end-of-pipe stormwater controls.

Typical advantages of LID over the conventional end-of-pipe approach include:

- Reduced consumption of land for stormwater management – LID practices provide opportunities to integrate stormwater controls into all aspects of a site's hardscape and landscape features. This allows multifunctional use of the entire developed site, allowing the most cost-effective use of land. Less land is needed or consumed for end-of-pipe controls, often allowing for more developable space.
- LID does not dictate particular land-use controls – Since LID is a technological approach there is no need to change conventional zoning or subdivision codes, except to allow LID's use. LID does not reduce development potential and, with less land consumed for stormwater controls, lot yields may increase.
- Reduced construction costs – Traditional stormwater management requires significant storm sewering and earthwork. LID practices apply controls as close to sources of runoff as possible. Wherever practicable, conveyances incorporate natural flow paths and swales instead of pipes. Structures installed are small, thus reducing the need for excavation and construction materials.
- Ease of maintenance – LID practices require limited maintenance. Much of the maintenance required can be accomplished by the average landowner. Further many LID site planning, conservation, and grading techniques require no maintenance.
- Takes advantage of site hydrology – LID mimics natural site hydrology and capitalizes on the capability of undisturbed land to retain and absorb runoff from impervious surfaces. Runoff that is absorbed recharges groundwater and stream baseflow and does not need to be managed or controlled by an end-of-pipe practice. Reduced end-of-pipe discharge is also beneficial for streambank stability and habitat.
- Better quality of discharge – Recent research indicates that most constructed technologies are unable reduce pollutant concentrations below certain thresholds, which may exceed water quality standards. Landscapes that utilize LID practices minimize discharge and often retain all runoff from events smaller than the 2-year, 24-hour design storm. Pollution is minimized because discharge is minimized.
- More aesthetically pleasing development – Traditional stormwater management tends to incorporate the use of large, unnatural looking practices such as detention ponds. When neglected, these practices may present safety and mosquito concerns. LID practices utilize pre-development land features that are small and fit well into the natural landscape.
- Improved marketability and property values – The advantages of LID management translate into the marketplace. The benefits to developers include reduced land clearing and earth disturbance costs, reduced stormwater management costs, reduced infrastructure costs (roads, stormwater conveyance and treatment systems), and increased quality of building lots and community marketability.

# 2 Stormwater Management Standards

This section describes the stormwater management requirements (i.e., standards) for the Town of Newington and the types of activities to which they apply (i.e., applicability). These standards promote the use of LID to protect water quality, reduce runoff volume, maintain groundwater recharge, and address peak flows and flooding during larger storms. These standards shall be met for each design or discharge point from a site (i.e., the catchment area that contributes to a BMP). Compliance with the standards by sizing BMPs to accept flow from more than one catchment area may be allowed at the discretion of the Town Engineer; however, such an approach will not typically be accepted for development projects.

The standards are generally consistent with the stormwater management approaches and design guidance contained in the Connecticut Department of Energy and Environmental Protection *Connecticut Stormwater Quality Manual* and the Connecticut Department of Transportation *Drainage Manual*, but also reflect the town's unique natural resources and development characteristics.

## 2.1 Standards

Standard 1: Use of Low Impact Development to Reduce Stormwater Runoff and Pollutants

LID techniques shall be used to the maximum extent practicable (MEP) to reduce stormwater runoff and pollutant loads. LID practices, both nonstructural and structural, are to be given preference over conventional end-of-pipe approaches. The Town anticipates that virtually all projects will manage and treat the Water Quality Volume or WQV (see discussion below) using LID.

MEP is intended to allow flexibility in situations where LID is best used in combination with conventional practices. For the purposes of this manual, MEP requires that applicants demonstrate the need to use non-LID approaches by:

- Documenting reasonable efforts to include LID for management of at least the WQV or the Water Quality Flow (WQF) for flow-based BMPs (see below).
- Documenting use of LID BMPs as described elsewhere in this manual.
- Documenting the highest reasonable level of LID-based stormwater management if full compliance with this standard cannot be practicably achieved.

<u>Water Quality Volume</u>

Added together, storms of up to one-inch depth make up about 90% of Newington's total annual rainfall. Untreated, these storms are responsible for the majority of stormwater pollution in our town. The water quality volume (WQV) refers to the volume of runoff from a given storm that a stormwater system shall be designed to collect and treat in order to remove the majority of pollutants. The WQV shall be equal to 1 inch of precipitation times the impervious surface in the catchment or 0.2 inches of precipitation times the total catchment area, whichever is larger.

The WQV shall be calculated using the following equation:

$$WQV = \frac{(1'')(i)}{12} or \frac{(0.2'')(A)}{12} \text{ (whichever is larger)}$$

where: $WQV$ = water quality volume (acre-feet)
$i$ = impervious area of the catchment (acres)
$A$ = area of the catchment excluding undeveloped areas (acres)

The above equation differs from the runoff coefficient calculation specified in the *Connecticut Stormwater Quality Manual*. The intent of the above equation is to account for both impervious surfaces and pervious areas with the potential to contribute stormwater pollutant loads.

Impervious and pervious areas that are disconnected from the stormwater drainage system or receiving waterbodies using techniques described in *Section 5.3* of this manual may be excluded from the WQV calculation. Where off-site areas also contribute to the site's drainage due to drain line interconnections or other factors such as run-on from upgradient areas, the off-site areas may be included in the calculation of WQV at the discretion of the Town.

Excluding disconnected areas is intended to encourage the use of stormwater disconnection as a LID practice.

Water Quality Flow

The water quality flow (WQF) is the peak flow rate associated with the water quality design storm or WQV. BMPs that are designed based on flow rate, rather than volume, such as grass channels and proprietary BMPs, should be designed to treat the WQF. The WQF shall be calculated using the NRCS, TR-55 Graphical Peak Discharge Method or other methods recommended by the manufacturers of proprietary BMPs, as described in the *Connecticut Stormwater Quality Manual*.

Groundwater Recharge Volume

As described in the *Connecticut Stormwater Quality Manual*, the groundwater recharge standard is intended to maintain groundwater recharge rates. The Town generally recommends the use the "Hydrologic Soils Group Approach," this approach involves determining the average annual pre-development recharge volume at a site based on the existing site hydrologic soil groups (HSG) as defined by the United States Natural Resources Conservation Service (NRCS) County Soil Surveys. Based on this approach, the GRV shall be calculated as the depth of runoff to be recharged, multiplied by the area of impervious cover, as shown below:

$$GRV = \frac{(D)(A)(I)}{12}$$

where: $GRV$ = groundwater recharge volume (acre-ft)
$D$ = recharge depth (inches), see *Table 2.1*
$A$ = site area (acres)
$I$ = post-development site imperviousness (decimal, not percent) for new development projects or the net increase in site imperviousness for re-development projects

Table 2.1
Recharge Depth by Hydrologic Soil Group

| Hydrologic Soils Group | Recharge Depth (D) (in) |
|---|---|
| A | 0.40 |
| B | 0.25 |
| C | 0.10 |
| D | Waived |

Where more than one hydrologic soil group is present on a site, a composite or weighted recharge depth shall be calculated based upon the relative area of each soil group. The GRV should be infiltrated in the most permeable soil group available on the site. *Figure 2.1*, below, shows the approximate location of soil type by HSG throughout the Town.

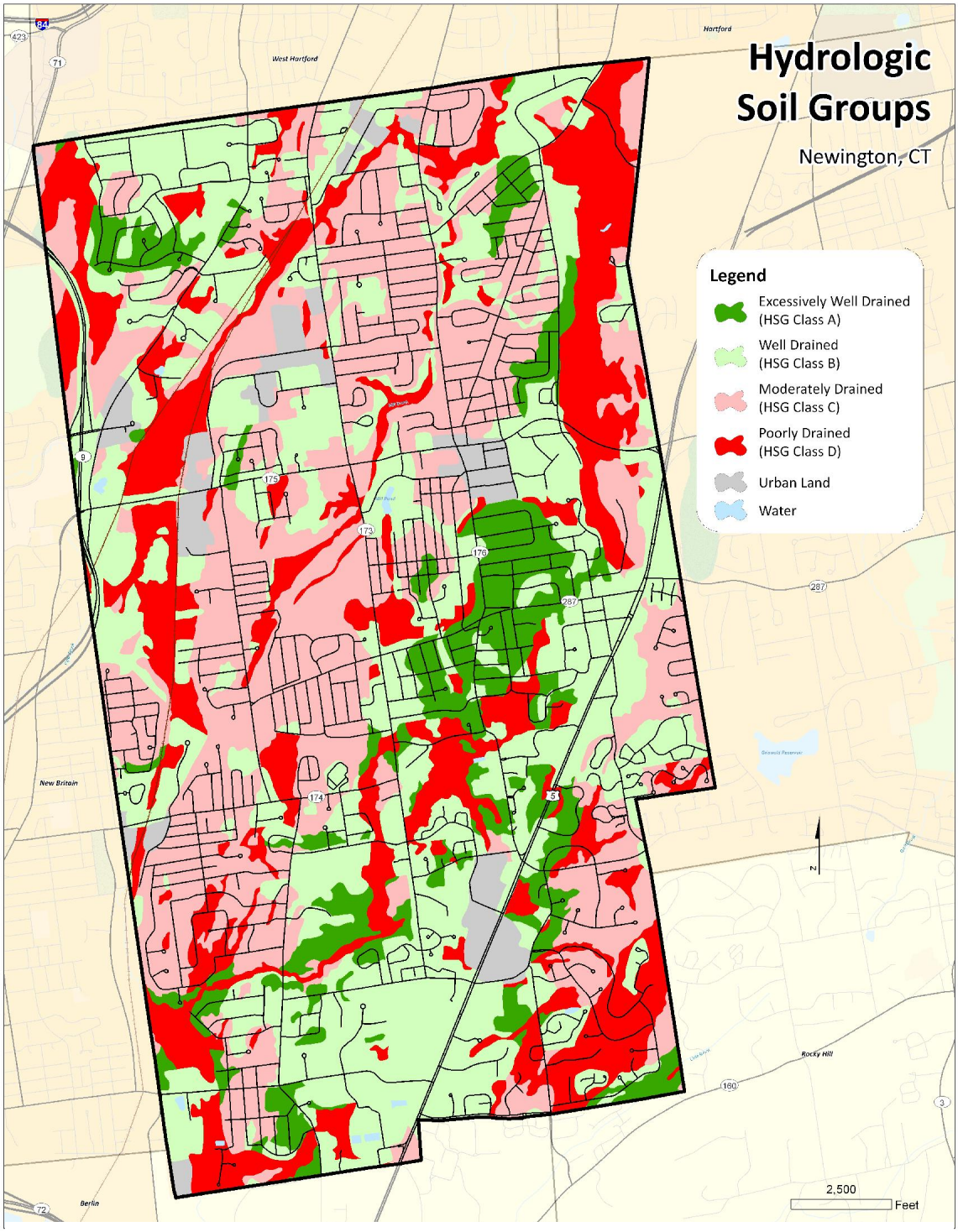


*Figure 2.1* – Hydrologic soil types in Newington

## Standard 2: Peak Flow Control and Flood Protection

Post-development peak rates of runoff must be managed to protect against stream channel erosion, to reduce the potential for flooding during larger storms, and to safely convey stormwater to, from, and through stormwater management systems.

Stream channel protection, conveyance protection, and emergency outlet sizing shall be managed in accordance with the *Connecticut Stormwater Quality Manual*.

Peak runoff attenuation is specified for 2-year, 5-year, and 10-year, 24-hour storms in the *Connecticut Stormwater Quality Manual*. As described in the Connecticut manual, the post-development peak flow rates shall not exceed the pre-development peak flow rates for all flows off site for the 2-year, 5-year, and 10-year, 24-hour design storms. Peak runoff attenuation for larger design storms (i.e., 25-year, 50-year, and 100-year storms) may be required, at the discretion of the Town, for large developments and special or sensitive situations. The Town may also, at its discretion, require the project proponent to evaluate pre- and post-development peak runoff rates associated with more intense, shorter-duration storm events or less intense, longer-duration storm events to reflect potential changes in rainfall characteristics due to climate change or other factors. This standard may be waived, at the discretion of the Town, for sites that discharge to a large river, lake, estuary, tidal waters, or land subject to coastal storm flows, as described in the *Connecticut Stormwater Quality Manual*.

Unless otherwise specified by the Town, the 24-hour design storm rainfall amounts shall be obtained from the on-line web tool for extreme precipitation analysis developed as a joint collaboration between the Northeast Regional Climate Center (NRCC) and the USDA Natural Resources Conservation Services (NRCS), http://precip.eas.cornell.edu, for New York and New England. The design storm rainfall amounts provided by this web tool offer advantages over previous products (e.g., "Rainfall Frequency Atlas of the United States," Technical Paper No. 40, U.S. Department of Commerce, Weather Bureau and NOAA Technical Memorandum "NWS Hydro-35," June 1977, U.S. Department of Commerce, National Weather Service) since the design storm rainfall amounts are based on a much longer period of record, including updates as new rainfall data is collected. Designers shall refer to the web tool for additional information such as design rainfall amounts for shorter design storms (less than 24 hours) and intensity-duration-frequency data.

## Standard 3: Construction Erosion and Sediment Control

A plan to control construction related impacts, including erosion, sedimentation, and other pollutant sources during construction and land disturbance activities (construction period erosion, sedimentation, and pollution prevention plan) must be developed and implemented in accordance with the *Connecticut Guidelines for Soil Erosion and Sediment Control* (as amended) and the requirements of the CTDEEP *General Permit for the Discharge of Stormwater and Dewatering Wastewaters from Construction Activities*.

All development, regardless of the area of disturbance, must implement erosion and sedimentation controls prior to and during construction. Additionally, temporary controls shall be removed from a site and disposed of properly after the site has been stabilized.

Standard 4: Operation and Maintenance

A long-term operation and maintenance (O&M) plan shall be developed and implemented to ensure that stormwater management systems function as designed. This plan shall be reviewed and approved as part of the review of the proposed stormwater management system. Execution of the O&M plan shall be considered a condition of approval of a development plan. The Town shall require a project proponent to establish a homeowners association or similar entity to maintain the stormwater management system.

The O&M plan shall identify:

- Stormwater management system(s) owners.
- The party or parties responsible for operation and maintenance including how future property owners will be notified of the presence of the stormwater management system and the requirement for proper operation and maintenance.
- The routine and non-routine maintenance tasks to be undertaken after construction is complete and a schedule for implementing those tasks.
- Log form or checklist for recording operation and maintenance activities.
- The maintenance agreement in place.
- Plan that is drawn to scale and shows the location of all stormwater BMPs along with the discharge points.
- Seal and signature of a professional engineer.

The project proponent shall provide a legal mechanism for implementing and enforcing the O&M plan (i.e., stormwater maintenance declaration), which shall be filed on the Town of Newington land records. A copy of the stormwater maintenance declaration is provided in *Appendix A*. The maintenance declaration shall contain (or reference as an attachment) a legal description of the property for which the declaration applies, a map showing the location of each stormwater management practice affected by the declaration, and a description of those activities that must be carried out to maintain compliance with the declaration.

In the event that the stormwater BMPs will be operated and maintained by an entity, municipality, state agency or person other than the sole owner of the lot upon which the stormwater management facilities are placed, the proponent shall provide a plan and easement deed that provides a right of access for the legal entity to be able to perform said operation and maintenance functions, including inspections.

Parties responsible for the operation and maintenance of a stormwater management system shall keep records of the installation, maintenance and repairs to the system, and shall provide such records to the Town upon request.

When the responsible party fails to implement the O&M plan, the Town may assume responsibility for their implementation and to secure reimbursement for associated expenses from the responsible party, including, if necessary, placing a lien on the subject property.

Standard 5: Redevelopment

Redevelopment is defined as alteration or improvement of real property that reconfigures existing impervious areas. Some examples of redevelopment include:

- Construction of building additions over an existing paved area.
- Demolition and replacement of buildings for any use.
- Paving of unsurfaced or gravel parking lots.
- Excavation and resurfacing of existing paved areas (Milling and resurfacing of an existing paved area may be allowed without meeting Standard 5 at the discretion of the Town Engineer).

Redevelopment standards are intended to enhance stormwater management through the increased use of LID in developed areas without discouraging redevelopment.

Redevelopment must meet stormwater Standards 2 – 4 in the same manner as development projects; however, Standard 1 may be met as follows:

- Achieve a net 50% reduction in existing impervious surfaces within the project limits of disturbance either by removing impervious surface (i.e., converting the impervious surface to a pervious surface) or by managing the WQV from the impervious surface through the use of LID BMPs.

Projects that entail both redevelopment and new development must:

- Achieve 100% management of the WQV of the net increase in impervious area through the use of LID BMPs in accordance with Standard 1.
- Achieve a net 50% reduction in existing impervious surfaces as described above.

Update of *Newington Stormwater Drainage Manual* (May 2000) Standards

The following discussion is intended to clarify certain standards in the *Newington Stormwater Drainage Manual* for the narrow purposes of facilitating the implementation of LID. This discussion is not intended to address other changes in stormwater and drainage techniques that may have been developed since the publication of the *Newington Stormwater Drainage Manual* nor is this discussion intended to be a comprehensive review of the *Newington Stormwater Drainage Manual*.

Proponents of projects involving stormwater management should consider the following clarifications:

Section A.I.C.4 "Riparian Buffers"
LID BMPs may be allowed in riparian buffers at the discretion of the Town in accordance with the *Inland Wetlands and Water Course Regulations*.

Section A.I.C.8 "Discharge Location"
Discharges may be directed to infiltration or overland flow in accordance with standards of this LID Manual.

Section A.III.B.5. [Hydrology Methods]
24-hour rainfall amounts should be based on the Natural Resources Conservation Service Type III precipitation distribution. Rainfall amounts should be obtained from the Northeast Regional Climate Center the unless otherwise required by the Town.

Section A.III.B.2 [Peak Flow Attenuation]
Techniques available for attenuation should be considered to include, but not necessarily be limited to, the management practices described in *Section 4* of this LID Manual.

Section A.IV.C.1 [Catch Basins]
LID is the Town's preferred stormwater management approach; therefore, catch basin installation is required where structural conveyance systems are necessary to supplement the use of LID.

Section A.VI.A [Easements and Rights-of-Way]
Easements and rights-of-way are required for BMPs that are to be operated by the Town. Easements and rights-of-way may also be required at the discretion of the Town Engineer for the purposes of ensuring proper BMP operation.

## 2.2 Applicability

### 2.2.1 General Applicability

The following table is intended to exemplify the general applicability of LID standards in accordance with Town policy.

Table 2.2
Example Applicability of Newington's Stormwater Standards

| Type of Project | Example | Stormwater Management Standard |
|---|---|---|
| Development | Commercial, Institutional, Industrial | Standards 1 - 4 |
| | Mixed-Use Development | |
| | Residential (e.g., residential subdivisions, multifamily residences, etc.) | |
| Redevelopment | Commercial, Institutional, Industrial Redevelopment | Standard 1 per Standard 5<br>Standards 2 - 4 |
| | Mixed-Use | |
| | Change in Use that Increases Parking Demand per Town Zoning | |
| | Addition to a House (Single or Multifamily up to a Quadraplex) | Standard 1 per Standard 5 (Standard 5 may generally be met by addressing *Section 4.3* of this manual)<br>Standards 2 - 4 |
| | Addition of an Appurtenance (e.g., patio, walkway, driveway, etc.) | |

### 2.2.2 New Development and Redevelopment

The stormwater management standards apply to new development and redevelopment activities in the Town of Newington, unless exempted. Two types of exemptions may apply:

1. Projects creating less than 600 square feet of new impervious or redeveloped surfaces provided that all of the following conditions are met:

    - The project drainage design will not have an adverse effect on offsite properties or offsite drainage infrastructure.
    - LID measures in accordance with the Town manual are implemented on the site to the maximum extent practicable to mitigate the effects of site disturbance and new impervious cover.
    - The project proponent submits an exemption request.

    This exemption is available only until the cumulative addition of unreviewed impervious surface on a site reaches 600 square feet, regardless of ownership changes. Residential "teardowns" – demolition and reconstruction or replacement of an existing residential dwelling with another residence of any size – are not allowed to exercise this exemption.

> Compliance with the stormwater standards (including use of LID to the maximum extent practicable) is required for all projects proposing to create 600 square feet or more of impervious surface. This standard allows the Town some flexibility and avoids the need for stormwater permitting on small projects such as walkways and patios.

2. Routine activities with low potential for adverse impacts to drainage or stormwater quality:

    - Resurfacing of an existing impervious area on a non-residential lot such as repaving an existing parking lot or drive with no increase in impervious cover.
    - Routine maintenance to existing town roads that is performed to maintain the original width, line, grade, hydraulic capacity, or original purpose of the roadway.
    - Repair or replacement of an existing roof of a single-family dwelling.
    - Construction of a second (or higher) floor addition on a single-family house.

### 2.2.3 Existing Development

Existing development includes those uses that have been previously permitted or grandfathered by the Town. The stormwater management standards do not apply to existing development, unless redevelopment or development activities are proposed on an existing developed site as described in the previous section. Retrofitting of existing developed sites with LID BMPs is voluntary, although encouraged to address existing water quality or drainage issues. *Section 4.5* of this manual discusses stormwater retrofits using LID techniques.

# 3 LID Planning and Design Process

LID represents a change in philosophy for stormwater management. Runoff is viewed as a resource, and hydrology is used as an organizing principle for site design – learning how to work with rain water in the landscape rather than just quickly disposing of it. LID is an ecologically-friendly approach to site development and stormwater management that aims not just to minimize development impacts (reduce impervious surfaces), but instead restore vital watershed ecological processes (natural hydrologic regime) necessary to restore and maintain the physical and biological integrity of waters.

LID uses management principles such as conservation of soils and drainage patterns; using integrated decentralized controls; uniform distribution of lot-level controls to increase runoff storage, contact time and time of travel; and, multifunction landscape features engineered to make the most cost effective use of space. The landscape is comprehensively engineered and optimized for stormwater controls. All of these principles are in direct contrast to conventional end-of-pipe treatment. *Figure 3.1* and *Figure 3.2* illustrate a comparison of conventional centralized controls and a LID decentralized approach.

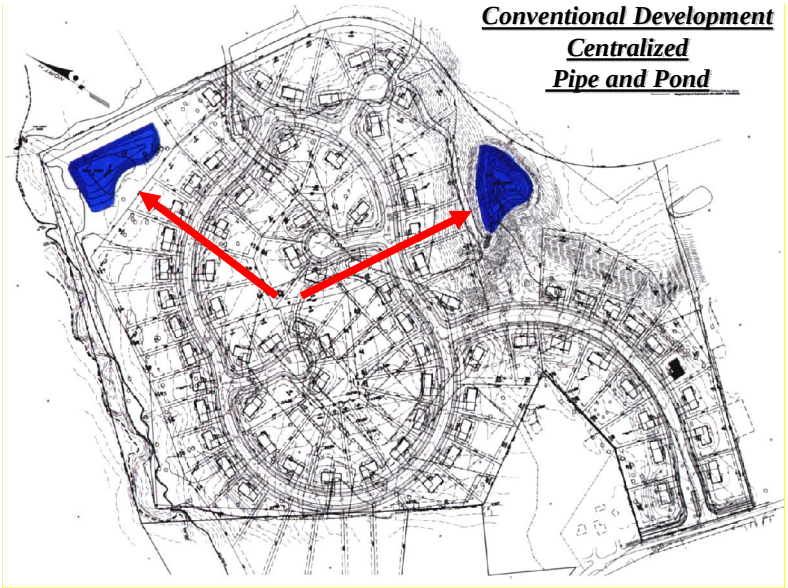


*Figure 3.1 – Conventional Controls*: A conventional approach requires clear cutting, mass grading and use impervious surfaces, gutters pipes and ponds to collect and treat runoff. This approach completely alters and destroys the natural hydrology and ability of the landscape to absorb rainwater and capture pollutants.

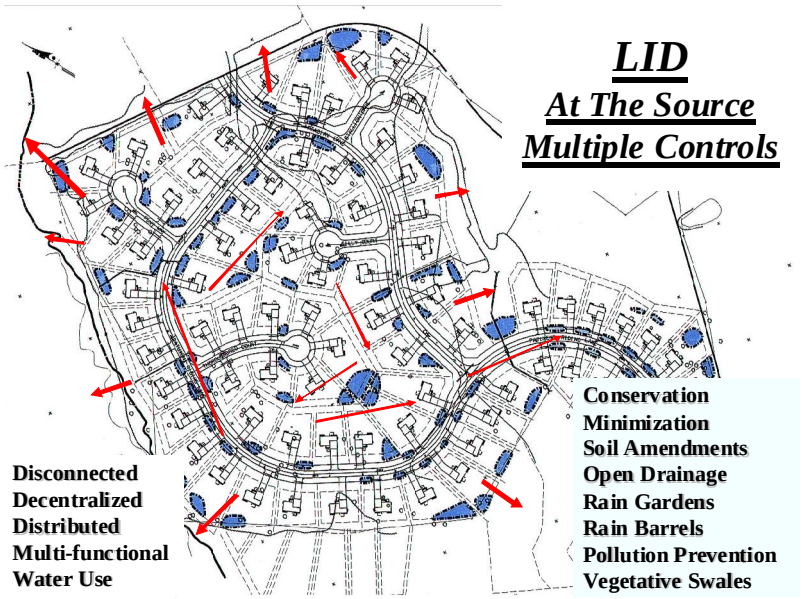


*Figure 3.2* – LID Controls: A LID approach use a wide array of techniques that work with the landscape, soils, drainage patterns and vegetation to minimize impacts and integrated management controls to retain, detain, infiltrate and filter runoff. LID can provide better stormwater controls by mimicking the pre-development hydrology. Often LID designs increase lot yield and reduce infrastructure cost.

A specific site planning and design process is recommended to optimize the benefits of LID. This process includes optimizing conservation at the larger project level, minimizing impacts at site level, maintaining drainage features, and the use of engineered integrated management practices. Basic LID planning principles and the LID design processes are described below.

## 3.1 Basic Planning Principles

A well-designed integrated stormwater management system will minimize the volume of runoff generated and maximize the treatment capabilities of the landscape. LID design manages runoff as close to the source as possible. A well-designed system should also be easy to maintain, not interfere with the typical use of the property, and be aesthetically pleasing. To optimize a LID design, it is important to consider four fundamental concepts, from the project's inception through final design:

1. Minimizing site disturbance
   Undisturbed lands possess a natural capacity to store runoff. Development sites may include areas that are relatively sensitive to impacts from construction (e.g., erosion) or may have particularly rare or valuable environmental features. Protecting susceptible natural features provides the multiple benefits of preserving important resources, reducing development impacts, and preventing erosion.

   Generally, project proponents should inventory and map natural features, such as surface waters, wetlands and highly erodible soils, for preservation early in the site planning process. This helps to define a development envelope that avoids impacts to environmentally-sensitive site features.

2. Working with site hydrology
   Traditional stormwater management approaches seek to eliminate runoff by rapidly conveying it away from development, typically, via closed drainage systems such as storm sewers. This approach works efficiently to remove water from streets and sidewalks, but it is expensive and alters site hydrology. By contrast, LID techniques eliminate or reduce the generation of runoff, thereby maintaining site hydrology.

3. Minimizing and disconnecting impervious surface
   Runoff is generated primarily from impervious surfaces, such as rooftops, roadways or any hard surface that prevents water from infiltrating into the ground. Traditional development approaches have typically resulted in excessive impervious surfaces, which can be reduced through careful site planning. Techniques to limit impervious area include reducing road widths and lengths as well as the area of rooftops (e.g., preference for multi-story over single-story buildings).

   To the extent possible, project proponents should use pervious areas and vegetation to manage runoff. This can be accomplished by increasing a site's time of concentration – length of time required for runoff to concentrate and flow off site – and by reducing the runoff curve number.

4. Applying small-scale controls at the source
   Small-scale practices applied close to the source of runoff provides significant advantages over conventional stormwater systems such as detention ponds. They can reduce the need for costly underground drainage systems and large end-of-pipe controls. By using materials such as native plants and soil, these systems can be integrated into the landscape and appear more natural than large, engineered systems. The natural characteristics may also increase homeowner acceptance and willingness to adopt and maintain such systems. Small, distributed practices also offer a major technical advantage – one or more of the systems can fail without undermining the overall integrity of the site stormwater management strategy. Small-scale practices reduce safety concerns as they feature shallow basin depths and gentle side slopes.

Another important factor in LID design is that it is best applied by a multidisciplinary team of professionals. The contributions of soils scientist, biologists, landscape architects, urban planners, and engineers are all equally important. It is not just about meeting the volume storage and flow regulatory requirements, it is about professionals using their combined knowledge and skills to create and design ecologically-functional, economically-viable, aesthetically-pleasing sites.

The following LID planning principles should remain in the forefront throughout the various steps of the site planning and design process. These principles require a completely different way of thinking about site design than traditional design approaches.

- Optimize Conservation – Conserve natural resource areas, vegetation and soils to help reduce and treat runoff.
- Mimic the Natural Water Balance – Use LID techniques to maintain existing site hydrology. This requires careful evaluation of site soils in order to preserve and use permeable soils as part of the LID control strategy. Conserving natural drainage features and topography will also help to limit site disturbance and runoff generation.

- Disconnect Impervious Surfaces – Disconnect impervious surfaces. Site runoff characteristics are significantly changed when impervious surfaces are disconnected from the drainage system or receiving waters through the use of landscape features or engineered LID practices. This approach prevents the adverse cumulative effects of collecting and concentrating flows and helps to reduce erosion problems.
- Decentralize and Distribute Controls – LID is most efficient when multiple controls are distributed throughout the landscape close to the source of runoff. Increasing runoff time of travel significantly reduces flows and discharge frequencies. Increasing storage features decreases runoff volume and reduces annual pollutant loads. Utilizing landscape features for filtration increases its capacity to capture and cycle pollutants.
- Multifunctional/Multipurpose Landscapes – Landscape can be designed to either reduce or restore hydrologic functions. Landscape features should be optimized to provide beneficial hydrologic and water quality functions by preventing, storing, retaining, detaining, and treating runoff.
- Outreach and Education – An effective LID program includes public education and outreach to foster an understanding and appreciation of LID principles and practices by the public, including homeowners and others responsible for maintaining LID practices.

## 3.2 Site Planning and Design Process

The LID approach emphasizes the use of site planning and design techniques to conserve natural systems and hydrologic functions. The simplest and least costly LID technique is effective site planning, with the goal of preserving the predevelopment hydrology to the extent possible. To accomplish this, LID requires a thorough understanding of the site's soils, drainage patterns, and natural features. Early consideration of a site's natural features, hydrology, and soils as design elements can suggest areas that are best suited for development and conservation.

Step 1 – Define Basic Project Objectives and Goals

The first step in the LID site planning and design process is to identify applicable zoning, subdivision, and other local land use planning and regulatory requirements, which influence the density and geometry of the development, specifying roadway widths, parking, drainage, and other requirements.

Identifying the project objectives not only includes identifying regulatory requirements, but also ecological needs. Ecological needs include these fundamental aspects:

- Runoff volume to match predevelopment.
- Peak runoff rate to meet regulatory needs.
- Flow frequency and duration to match predevelopment.
- Water quality to meet regulatory requirements.
- Stream or wetland base flow needs.
- Recharge areas.
- Natural resource conservation requirements.

To ensure ecological needs receive appropriate attention, the project proponent should prioritize and rank objectives and determine the type of controls required to meet objectives such as infiltration,

filtration, discharge frequency, volume of discharges and groundwater recharge. Determine the feasibility for type and proper location of LID controls to best address volume, flows, discharge frequency, discharge duration and water quality.

Step 2 – Inventory and Evaluate Site Resources

Incorporating LID into site design requires a thorough assessment of the site and its natural systems. A site inventory and evaluation should be performed early in the site planning and design process to help identify challenges and/or opportunities for stormwater management and site development.

1. Conduct a detailed investigation of the site using available documents such as drainage maps, utilities information, soils maps, land use plans, and aerial photographs.

2. Evaluate site constraints such as available space, soil infiltration characteristics, water table, slope, rock outcrop, drainage patterns, sunlight and shade, wind, critical habitat, existing buildings, infill opportunities, circulation and underground utilities.

3. Identify protected areas, setbacks, easements, topographic features, sub drainage divides, and other site features that should be protected such as floodplains, steep slopes, and wetlands.

4. Delineate watershed and micro-watershed areas. Take into account previously modified drainage patterns, roads, infill opportunities, and stormwater conveyance systems.

Other unique site features may influence the site design including historical features, view sheds, climatic factors, energy conservation, noise, watershed goals, onsite wastewater disposal and off-site flows. All of these factors help to define the development area and natural features to be integrated into the LID design.

Step 3 – Conserve Natural Features

Successful LID design begins with understanding of the site's natural resources and how best to save these features and incorporate them into the stormwater management system. Natural features (wetlands, trees/vegetation, permeable soils) should be conserved and integrated into the overall site plan. The conservation features should continue to be used by directing runoff to the natural features in the same manner as the predevelopment conditions. The greater use of natural features generally reduces clearing and grading and associated costs.

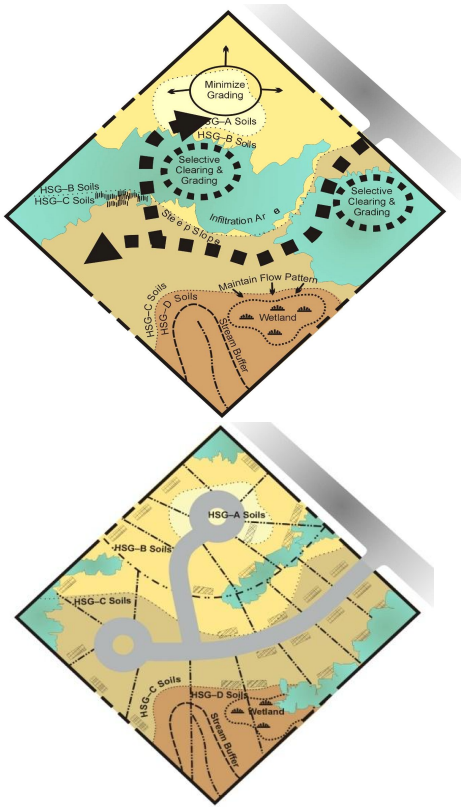


*Figure 3.4* – Optimizing the use of green space.

Locating infrastructure to direct runoff to buffers, vegetative filters, and existing drainage features will help to reduce runoff quantity and improve water quality. This approach reduces disturbance of the natural soils and vegetation allowing more areas for infiltration and runoff contact with the landscape. To optimize the use of green space requires an ability to lay out the site infrastructure in a way that allows saving sensitive the natural features and their functions. The basic strategy is shown in *Figure 3.4*.

There are many techniques that should be considered including:

- Minimizing and properly stage grading and clearing for roadways and building pads as only necessary.
- Locating, saving and utilizing pervious soils.
- Locating treatment practices in pervious hydrologic soil groups A and B.
- *Where feasible*, constructing impervious surfaces on less pervious hydrologic soils groups C and D.
- Disconnecting impervious surfaces by draining them to natural features.
- Flattening slopes where possible.
- Re-vegetating cleared and graded areas.
- Utilizing existing drainage patterns.
- Routing flow over longer distances.
- Using overland sheet flow.
- Maximizing runoff storage in natural depressions.

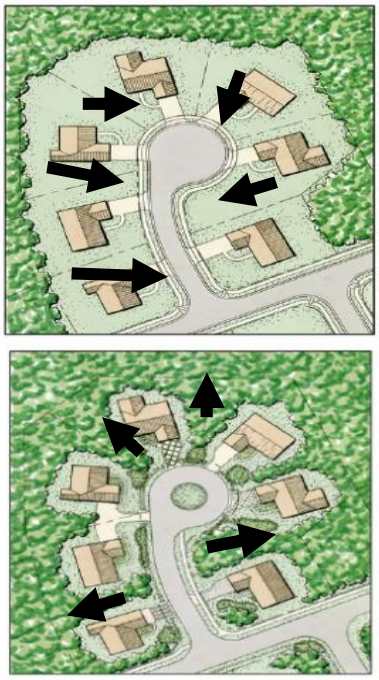

*Figure 3.5* – Contrasting runoff patterns in conventional (top) and LID design (bottom).

Step 4 – Determine the Development Envelope

Determine the development envelope in which buildings, roads and other constructed features should be sited with minimal effect to site hydrology and other ecological, scenic, or historic features. Generally, the development envelope will include upland areas, ridge lines, gently sloping hillsides, and less permeable soils outside of wetlands. Setting the development envelope should also consider construction techniques, and make efforts to retain and protect mature trees, minimize clearing and grading for buildings, access and fire prevention, and other construction activities, including stockpiles and storage areas. The envelope should also be confined to areas to be permanently altered. Limiting the development envelope also reduces the amount of site disturbance and impervious cover, thereby generating less runoff and requiring smaller stormwater management systems.

In general, the following steps should be followed to determine the development envelope:

1. Determine those environmentally sensitive areas to be protected from development.

2. Delineate the different vegetative cover types on the site. Highlight those areas of special characteristics or environmental sensitivities. Areas with concentrations of large mature trees should be noted on the plan.

3. Determine and delineate steep slopes (slopes greater than 25% or 4 horizontal to 1 vertical slope as measured over a minimum distance of 50 feet).

4. Determine and delineate soils having moderate to high infiltration rates (HSG A and B soils).

5. These areas should be reserved for LID infiltration practices for post-development runoff.

6. Determine and define the pre-development runoff patterns on the site in order to provide a preliminary understanding of the site's drainage patterns and the ultimate discharge points.

7. Once the above areas have been clearly delineated on the site plan, the remaining areas would become the available development envelope. This is not to say that development cannot extend beyond the defined development envelope; it is however a starting point to develop environmentally sensitive site plans.

*Figure 3.6* – LID techniques at the lot level.

## Step 5 – Minimize Impacts at the Lot Level

To the extent possible, conserve trees, natural drainage patterns, permeable soils and depressions on a lot or site, which will often result in less clearing and grading. *Figure 3.5* contrasts the conventional approach of draining runoff to the streets versus a LID design using site fingerprinting where runoff is directed to natural features.

The key to preventing excessive runoff from being generated is to slow down velocities by directing runoff toward areas where it can be infiltrated or stored. The use of many small measures throughout the site will serve this purpose better than a single larger control measure.

Techniques that should be considered include:

- Directing flows to vegetated areas, including roof runoff.
- Directing flows from paved areas to stabilized vegetated areas.
- Breaking up flow directions from large paved surfaces.
- Encouraging sheet flow through vegetated areas.
- Locating impervious areas so that they drain to permeable areas.
- Maximizing overland sheet flow.
- Lengthening flow paths and increase the number of flow paths.
- Maximizing use of open swale systems.
- Increasing (or augmenting) the amount of vegetation on the site.
- Using site fingerprinting. Restricting ground disturbance to the smallest possible area.
- Reducing paving.
- Reducing compaction or disturbance of highly permeable soils.
- Avoiding removal of existing trees.
- Reducing the use of turf and use more natural land cover.

- Maintaining existing topography and drainage divides.
- Locating structures and roadways on Type C soils, where feasible.[1]

Various lot level techniques are illustrated in *Figure 3.6*.

[1] Because Type C and D soils tend to be poorly suited to construction, siting structures on them may be ineffective from a cost-benefit standpoint or technically impractical.

# 4 Use of LID Management Practices

LID management practices are generally small-scale structural stormwater Best Management Practices (BMPs) that can be used to manage the remaining stormwater runoff from a site after applying LID site planning and design techniques. LID BMPs are typically used in combination with LID site planning and design techniques to meet the stormwater management standards described in *Section 2* of this manual. These practices provide additional opportunities for runoff storage, detention, infiltration, and filtration on a site.

The remainder of this section focuses on the use of BMPs for common land uses settings in the Town of Newington:

- Low- to medium-density residential settings.
- Commercial, industrial and high-density residential settings.
- Roadways.
- Retrofits.

## 4.1 LID in Residential Settings

In addition to the many possible site planning techniques used, additional treatment can be provided using the following engineered practices listed below. *Figure 4.1* provides a schematic example of a combination of practices. Some potential applications of BMPs are discussed below.

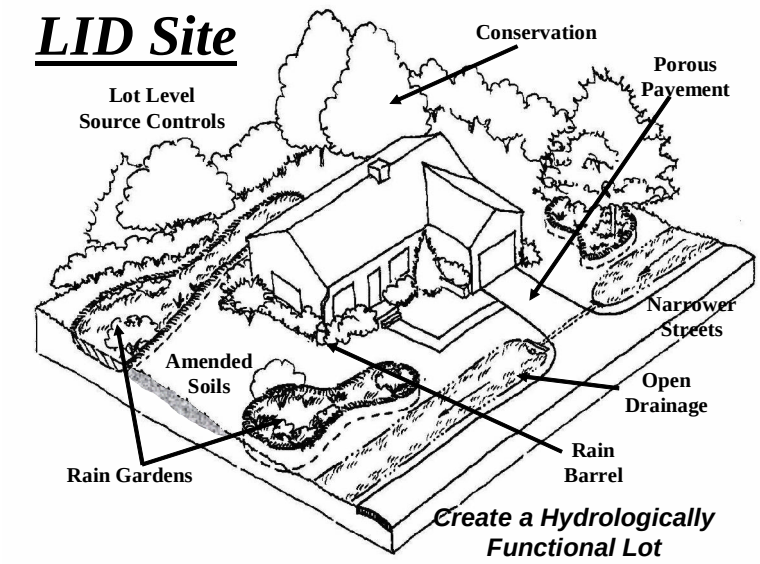


*Figure 4.1* – Schematic of engineered LID practices.

- Bioretention or Rain Gardens – Vegetated depressions that collect runoff and either filter before discharge or infiltrate it into the ground.
- Dry Wells – Gravel- or stone-filled pits that are located to catch water from roof downspouts or paved areas.
- Filter Strips – Bands of dense vegetation planted immediately downstream of a runoff source designed to filter runoff before entering a receiving structure or water body.
- Grass Swales – Shallow channels lined with grass and used to convey and store runoff.
- Infiltration Trenches – Trenches filled with porous media such as bioretention material, sand, or aggregate that collect runoff and exfiltrate it into the ground.
- Permeable Pavement – Asphalt or concrete rendered porous by the aggregate structure.
- Permeable Pavers – Manufactured paving stones containing spaces where water can penetrate into the porous media placed underneath.
- Rain Barrels and Cisterns – Containers of various sizes that store the runoff delivered through building downspouts. Rain barrels are generally smaller structures, located above

ground. Cisterns are larger, are often buried underground, and may be connected to the building's plumbing or irrigation system.

- Tree box filters – Curbside containers placed below grade, covered with a grate, filled with filter media and planted with a tree in the center.
- Vegetated Buffers – Natural or man-made vegetated areas adjacent to a waterbody, providing erosion control, filtering capability, and habitat.
- Small detention features – For example driveway culverts can be undersized to detain flow and encourage stormwater retention.
- Infiltration Swales – Swales designed with infiltration trenches.

## 4.2 LID for Existing Residential Areas

### 4.2.1 Residential Stormwater Management Overview

Stormwater pollutants commonly associated with residential lots include pesticides and fertilizers used in landscaping. Other pollutants may include sediment from erosion-prone areas, yard waste such as leaves and grass clippings, pet waste, and oil and gas from driveway surfaces. Even runoff from rooftops can contain pollutants known to occur in rainfall. These have the potential to be transported in stormwater to surface water bodies, posing risks to the environment and human health. While the contribution from an individual yard may seem small, the cumulative effects of stormwater runoff from hundreds or thousands of homes within a watershed can be significant. Reducing the amount of stormwater runoff from a site helps to address flooding and pollution of streams, lakes, and ponds. Just as importantly for many Newington residents, LID can reduce nuisance drainage problems in residential areas since LID practices typically retain stormwater on site or recharge it to the ground.

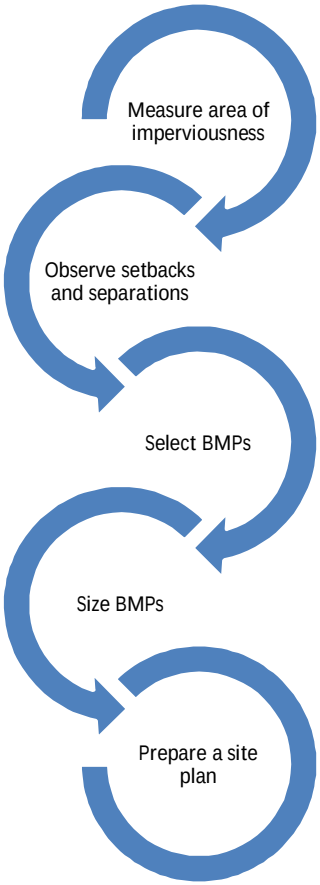


*Figure 4.2* – Five steps for siting retrofit BMPs on individual

This section of the Newington LID Manual is intended for use by homeowners, who wish to improve existing onsite drainage conditions with LID and for owners of single- and multi-family homes (i.e., one to four dwelling-units), who are planning building additions or additions of appurtenances such as patios, walkways, pools, and decks. Homeowners may to hire design and construction professionals to help with residential projects as required; or homeowners may do the work themselves. This section is written to support either approach.

### 4.2.2 Avoid, Reduce, and Manage

## Stormwater Impacts

There are several steps to follow when managing stormwater on an existing residential lot. First, avoid the negative impacts of stormwater to the extent possible. Protect undisturbed open space and existing vegetation by minimizing land disturbance and making the construction footprint as small as possible on the parcel.

Avoid impacts to natural drainage areas and limit soil compaction to the structural footprint only. Next, reduce impacts by minimizing the amount of stormwater runoff that flows off the lot. Eliminating or reducing the size of rooftops, driveways and other paved surfaces will reduce the amount of stormwater runoff that is generated from these impervious surfaces. Plant native shrubs and trees and low maintenance, drought-resistant turf grasses that require less irrigation, fertilizers, and pesticides. Use sustainable landscaping practices to promote plant health and limit the amount of chemicals applied to the landscape. For more information on planting, refer to the planting guidance in Appendix A of the *Connecticut Stormwater Quality Manual*.[2]

Finally, manage any stormwater runoff from the site that cannot be eliminated by directing it to pervious areas or stormwater management practices that will allow the water to infiltrate into the ground.

## Five Steps for Siting BMPs on Existing Residential Lots

This manual recommends five key steps for siting BMPs on existing residential lots. They are as follows.

1. Measure the surface area of rooftop and driveway areas.
2. Observe setbacks for BMPs for other site features such as buildings and separation distances to groundwater.
3. Select BMPs based on site conditions.
4. Size the selected BMPs.
5. Prepare a site plan depicting location of all proposed BMPs.

[2] Appendix A of the Connecticut Stormwater Quality Manual is available on the internet at: http://www.ct.gov/deep/lib/deep/water_regulating_and_discharges/stormwater/manual/Apx_A_Plant_List.pdf.

A discussion of each of the five steps follows:

Step 1: Determine the surface area of new rooftop and driveway areas.
The purpose of this step is to calculate the surface area in square feet to be managed. This may include

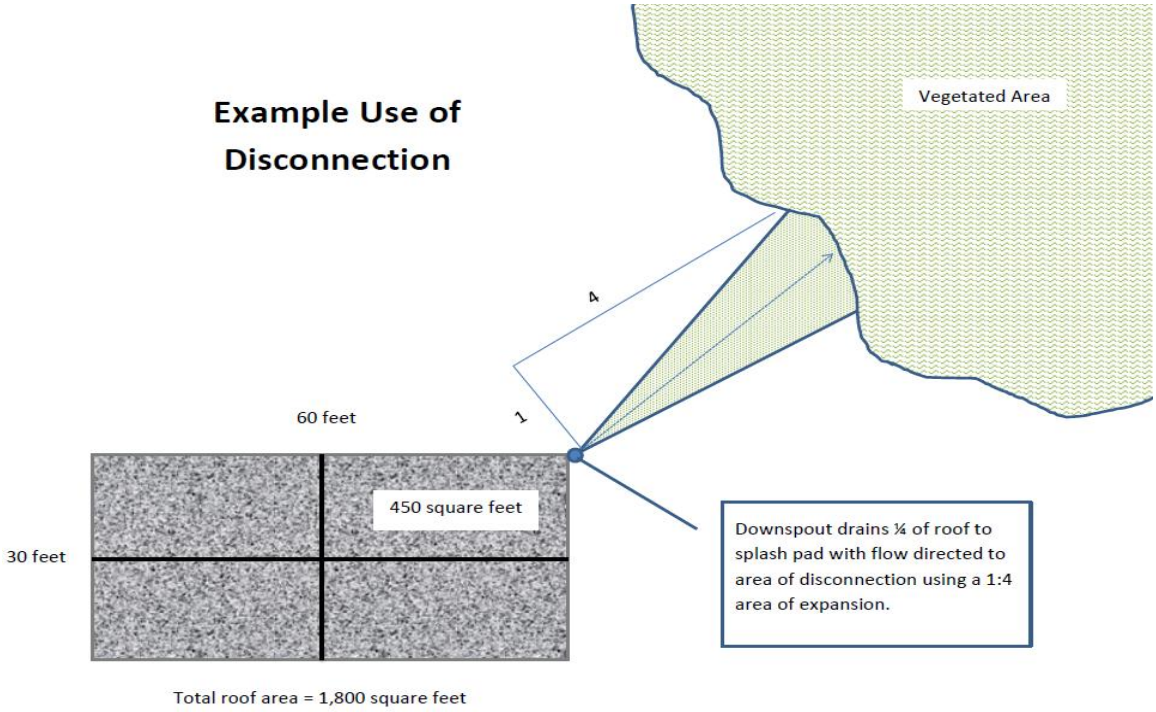


*Figure 4.3* – Treating a rooftop with disconnection, adapted from "Rhode Stormwater Management Guidance for Individual Single-Family Residential Lot Development" (RIDEM, 2013)

existing, new, or added impervious surfaces. Determine the area of rooftops, driveways and parking areas by multiplying the length in feet times the width in feet. The resulting area will be in square feet. Alternatively, use the footprint area of the building as measured from the site plan. If the total area to be added is greater than 600 square feet, or if you are conducting this exercise for improving the management of existing area, then proceed to Step 2.

Step 2: Observe setbacks for BMPs for other site features such as buildings and separation distances to groundwater.
If needed, get a professional engineer or certified soil scientist to determine soil drainage and texture. When choosing locations for stormwater management practices, be sure to observe minimum separation distances and setbacks.

To ensure proper functioning of a stormwater management practice, make sure it is located in an area with adequate soil drainage. Improper siting of stormwater management practices can cause extended ponding or overall failure of the practice, which can lead to flooding and possibly mosquito breeding problems on the site. Private homeowners may test a potential site by digging a 6 to 8 inch deep hole, filling it with water, and observing infiltration. If the water does not drain within 12 hours, the location is not appropriate for an infiltrating stormwater management practice.

Potential stormwater practice locations can be inspected by a registered professional engineer or certified soil scientist. If planning to install an infiltration trench or dry well, determine the depth to the seasonal high groundwater table (SHGWT). This is especially advisable if there is a known or suspected shallow depth to SHGWT anywhere on the site. Determinations of depth to the SHGWT are best done by a professional engineer or certified soil scientist. Alternatively, refer to a prior determination of the depth to SHGWT such as may appear on a prior subsurface sewage disposal system (i.e., septic system) (SSDS) plan. The depth to SHGWT is not required for stormwater disconnection, vegetated swales, rain gardens or permeable pavement. Remember, state law requires notifying *Call before You Dig (811) at least two business days before you dig.*

Step 3: Select BMPs based on site conditions.
After identifying locations on the site that are appropriate for stormwater management practices, select the type of practice to be installed at each location. More than one practice may be selected to meet the stormwater management requirements. The Town of Newington strongly recommends that do-it-yourselfers rely on disconnection wherever practicable for the following reasons:

- Disconnection reduces runoff through vegetative uptake and groundwater recharge. Done properly, this helps to mitigate onsite ponding and optimizes pollution reduction benefits.
- It involves little or no construction. This makes installation relatively simple and reduces risks associated with excavation.
- It's generally the least expensive BMP.

Below are example sizing of BMPs for the do-it-yourselfer. This sizing is slightly conservative to simplify the calculations. Design professions should use the sizing standards provided in *Section 5*.

Table 4.1
Do-It-Yourself BMP Sizing Examples
(Approximate Sizing for BMPs in Different Soil Types per
One Hundred Square Feet of Impervious Area)

| BMP Type | Hydrologic Soil Type | | | |
|---|---|---|---|---|
| | A | B | C | D |
| Disconnection to a Grassy Area | 50 square feet | 400 square feet | Requires Design Professional | Not Acceptable |
| Bioretention | 8.5 cubic feet (e.g., 17 square foot surface reservoir 6 inches deep) | | Requires Design Professional | Not Acceptable |
| Dry Well | 8.5 cubic feet (e.g., 3 feet x 3 feet x 3 feet rock-filled well ) | | Requires Design Professional | Not Acceptable |
| Rain Barrel[a] | 65-gallon storage | | | Not Acceptable |

Note
[a] Rain barrels may be used to manage flow from existing rooftops. Rain barrels are not acceptable for water quality treatment of redevelopment or development projects.

Step 4: Prepare a site plan depicting location of all proposed BMPs.
After selecting and sizing the appropriate BMPs for the previous steps, size each practice to accommodate the water quality volume, or the first one inch of runoff from the contributing impervious surface. To do this, determine the drainage area, which is the area of impervious surface that drains to each practice. For example, if a practice will receive runoff from a single downspout that drains ¼ of a rooftop, calculate the drainage area by dividing the entire roof area by 4 (see *Figure 4.1*, above). To determine the water quality volume from each drainage area, multiply the drainage area in square feet by 0.083 (ft/in).

## 4.3 LID for High Density Industrial, Commercial and Residential Development

It is relatively easy to understand how LID principles and practices can be applied to single family residential development where there is ample space. High density development seems much more challenging with little green space available for LID practices. However, there is little difference in the application of LID site design principles and the use of small scale engineered practices for volume and water quality control. The only difference is LID practices must be designed to accommodate building architecture, sidewalks, parking lots, streets and landscaping.

It is still important to optimize the conservation and use of natural resources and soils on the larger project level and where feasible minimize impacts internal to the site.

The examples shown in *Figure 4.4* provide general LID design strategies for office buildings, small commercial buildings and big box sites. These site designs include a variety of techniques.

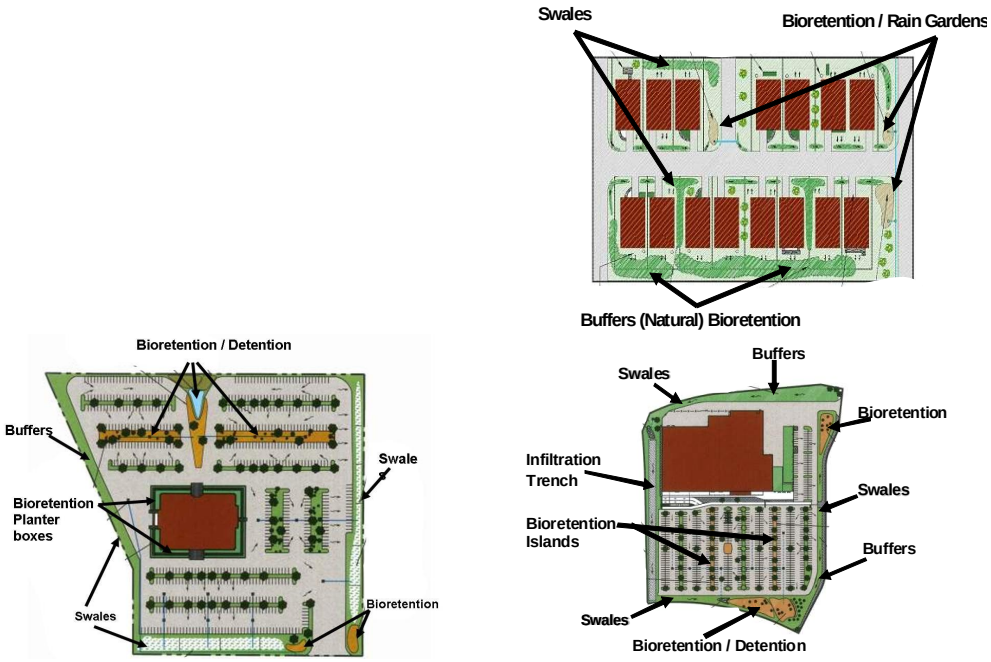


*Figure 4.4* – LID design strategies for office buildings, small commercial buildings, and big box sites.

Typical LID techniques used for high-density developments include: perimeter buffers, swales and bioretention systems; parking lot bioretention/detention islands, planter boxes, green roofs, porous pavers/pavement and infiltration devices and underground storage. Runoff can be stored for use or controlled under buildings, parking lots and sidewalks using porous pavers and volume storage devices.

LID techniques can be integrated throughout the available green space using a range of bioretention techniques such as planter boxes, swales and street trees. In addition to the LID techniques previously listed, other engineered practices for high density development are included below. *Figure 4.5* provides a schematic example.

- Planter Boxes – Bioretention systems within containers designed for filtration and or infiltration.
- Green Roofs – Vegetated roofs designed for retention / detention storage and, filtration.
- Underground Storage – Use of cisterns, pipes, vaults or other storage devices for retention or detention storage.
- Porous Pavers and Surfaces – Porous surfaces design in combination gravel storage or other.
- Manufactured Devices – Numerous commercial devices are available for filtration, screening, storage and treatment that can be integrated in the high density development.
- Building Architecture – Buildings can be designed to capture hold and use more runoff with, cisterns, planter boxes and wall planting systems.

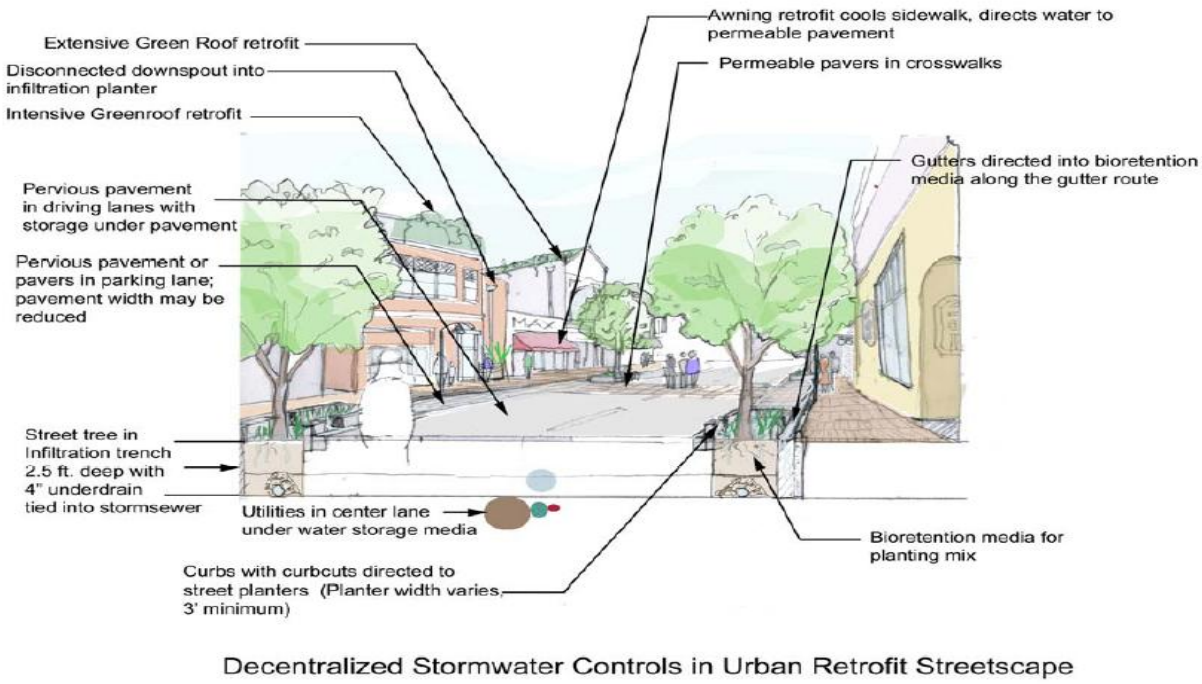


*Figure 4.5* – Schematic example of engineered practices in an urban retrofit streetscape.

## 4.4 LID Roadway Designs

Roadways generate a major portion of runoff in urban areas and present significant engineering challenges in developing effective LID roadway controls. Despite the challenges there are effective LID design principles and engineering practices available for any roadway system to meet water quality objectives. However, use of some techniques may require modification roadway design standards. Further, in highly urbanized development, site constraints (limited space, poor soils and utility conflicts) often require more extensive engineering and use of more expensive structural LID practices.

A LID roadway design does not require reduction of impervious surface but rather optimizing the integration of LID practices by engineering the roadway itself or the surrounding landscape/streetscape to provide storage, detention or filtration as applicable. Reduction of the roadway surfaces is most useful in creating additional space for the use LID practices. Consider opportunities to hydrologically disconnect roadway surfaces by directing runoff to LID practices for storage, detention or infiltration.

### 4.4.1 Open Section Roadways

Open section roadways consist of a variable-width gravel or grass shoulder, usually wide enough to accommodate a parked car, and an adjoining grassed swale that conveys and treats runoff. When feasible, reducing road width provides greater opportunities to increase the width of grass shoulders and swales for treatment.

Street pavements width should be adjusted accordingly depending on off-street parking availability and shoulder requirements. Where feasible preserve existing vegetation and drainage features adjacent to the shoulder or swale. Also consider placing utilities under street pavements to eliminate conflicts with tree roots, grassed swales, and bioretention areas.

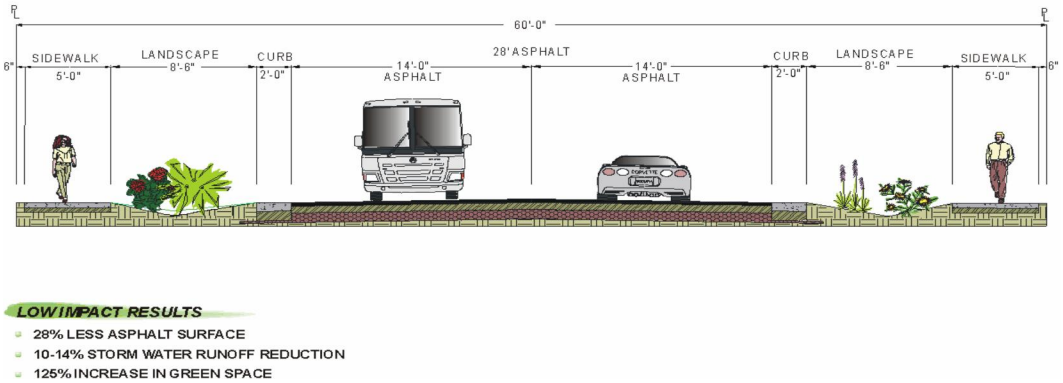


*Figure 4.6* – Open section roadways.

A primary goal of LID is to work with landscape hydrology and make it more functional (i.e., to use the surrounding landscape to absorb and filter water). *Figure 4.6* shows a 60-foot roadway design with sidewalks on both sides. The important LID feature is the use of wider more functional swales for treatment and control. Notice that the swales are located between the road surface and sidewalks providing greater protection to pedestrians.

The figure below (*Figure 4.7*) shows a narrow road section with sidewalks, shallow swale and porous pavement shoulders. The paver blocks provide a rough surface to alert drives if their tires leave the road surface. The pavers also protect the edge of the asphalt surface from breaking off. Generally, very shallow and broad swales are preferred as they provide more surface area to treat and absorb runoff. Swale performance can be greatly enhanced when you can take advantage of infiltration.

*Figure 4.7* - Narrow low-volume road section with sidewalks, shallow swale and porous pavement shoulders.

The figure below (*Figure 4.8*) shows an example of how to design a swale to enhance its ability to filter and infiltrate runoff. In this case several features have been incorporated into the design including using the culvert as a weir for detention control; check dams to increase ponding time and decrease velocities; trench drain along the bottom of the swale to encourage infiltration and increase runoff storage in the engineered soil. Road water quality treatment swales should be designed to be shallow with under drains if possible to encourage good drainage and discourage standing water and associated nuisance problems.

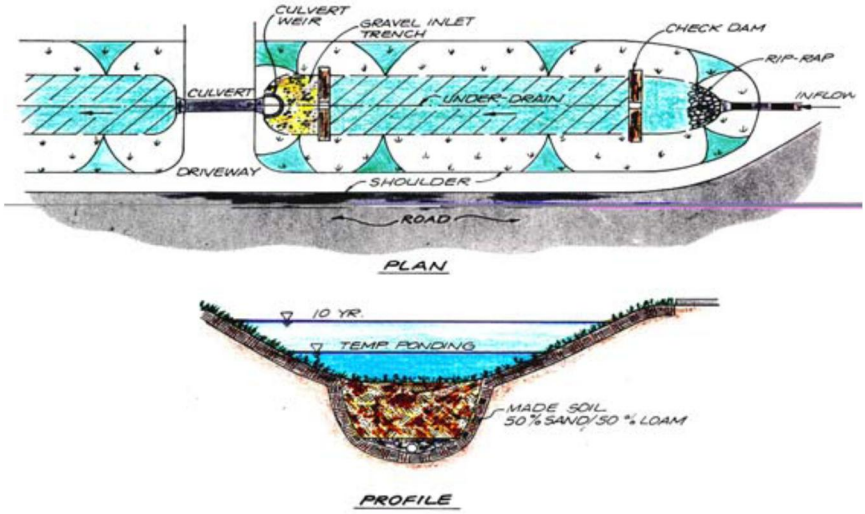


*Figure 4.8* - Swale design to enhance its ability to filter and infiltrate runoff.

When it is possible to use narrower roadways, the table below (*Table 4.2*) provides suggested general guidance. Even a narrow street width of 22 feet can still accommodate parking on one side of the

roadway and leave ample room for a safe travel lane that is generous enough to accommodate most fire trucks, school buses, and garbage trucks.

Table 4.2
General Guidance for Narrower Roadways

| Local Streets | |
|---|---|
| No On-Street Parking | 18 feet |
| Parking on One Side | 22 feet |
| Parking on Both Sides | 28 feet |

Adapted from *Designing Walkable Urban Thoroughfares (ITE, 2010).*

Local Streets are intended to provide access to individual lots. They should provide low-speed bicycle and vehicle routes and while accommodating pedestrians. In comparison to other types of streets, local streets should generally be short in total distance.

In residential areas, "yield" local streets provide the preferred cross-section to encourage equal priority among all users. These streets are characterized by a relatively narrow unstriped travelway shared by all vehicles, and also have comfortable pedestrian facilities. "Narrow" local streets may be used where most parking is handled off-street. This is typical in a traditional neighborhood design (TND) context. Where on-street parking is expected to be more heavily used, yield streets may not be appropriate.

Each local street type should feature a 14-foot minimum clear travel path so as to appropriately accommodate emergency vehicles.

## 4.4.2 Cul-De-Sac Designs

Homebuyers often prefer cul-de-sac properties for many reasons, and thus cul-de-sacs have become quite common. Depending on a subdivision's lot size and street frontage requirements, five to ten houses can usually be located around a standard cul-de-sac perimeter. The bulb shape allows vehicles up to a certain turning radius to navigate the circle. To allow emergency vehicles to turn around, cul-de-sac radii can vary from as narrow as 30 feet to upwards of 60 feet, with right-of-way widths usually extending ten feet beyond these lengths. *Figure 4.9* shows an open section roadway with on lot bioretention and a cul-de-sac with a bioretention area in the center for roadway runoff.

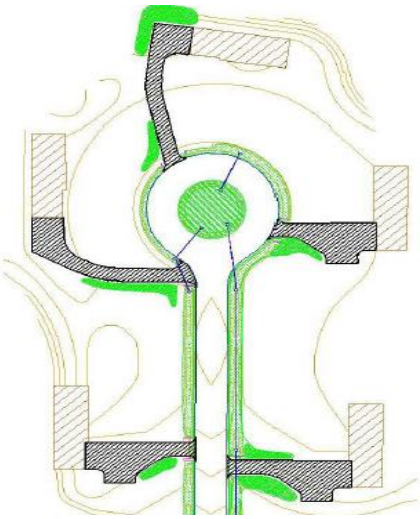

*Figure 4.9* – Cul-de-sac designs.

## 4.4.3 Divided Highways

The wider right-of-ways of divided highways provide many opportunities for LID practices on the shoulders and in the median. *Figure 4.10* and *Figure 4.11* provide examples of these options.

*Figure 4.10* – Examples of center median infiltration/filtration systems

*Figure 4.11*- Shoulder Treatment Systems using detention and filtration design.

## 4.4.4 Highly Urbanized LID Street Design

Below are two examples of planter box designs in high density development (*Figure 4.12*). The image on the left is a slow flow system that requires very large surface areas to treat the water quality volume. The image on the right is a very high flow media system that has an extremely small foot print saving space reducing overall construction and maintenance costs. However, both provide the same water quality treatment benefits. Both systems can be designed with underground storage for detention infiltration or

retention to be used for irrigation. There are many devices that can be used for underground storage ranging from metal, plastic or concrete pipes to a variety of plastic prefabricated storage devices.

*Figure 4.12* – Examples of bioretention and planter box design in high density development in Connecticut.

## 4.4.5 Porous Surfaces

Porous pavers, asphalt and concrete are all other design options to provide a hard surface suitable for roadways that allow runoff to percolate into underground gravel beds or other storage devices for detention or infiltration. An example is provided below as *Figure 4.13*. To reduce the cost of these surfaces, they should not be placed over the entire roadway but rather strategically placed and sized to allow sufficient runoff volume to enter the underlying storage device.

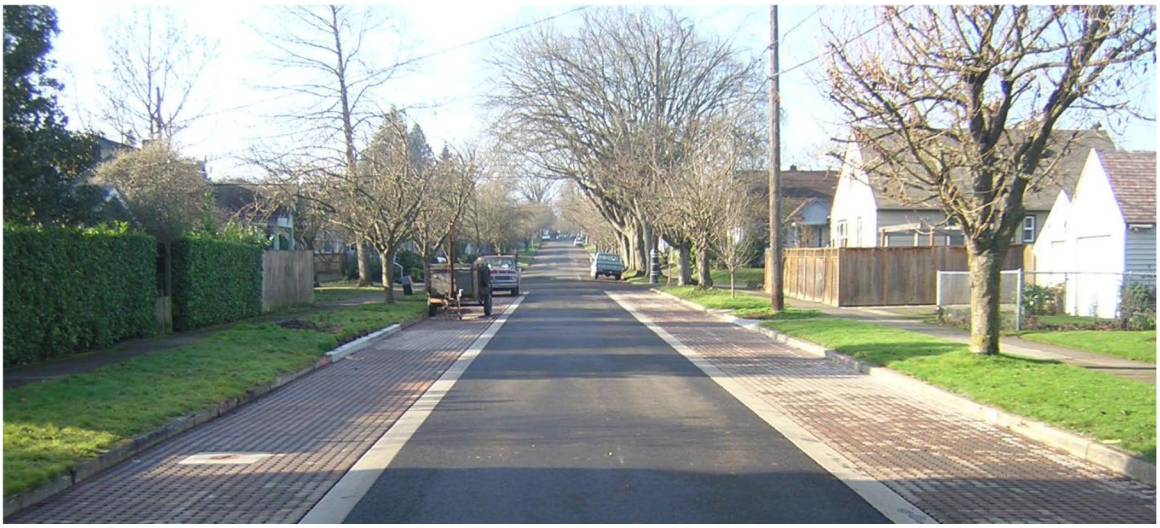

*Figure 4.13* – Porous surfaces.

### 4.4.6 Other LID Roadway Design Considerations

- Maximize natural drainage – when planning streets, consider preserving natural drainage patterns and soil permeability by preserve natural drainage patterns and avoid locating streets in low areas or highly permeable soils.
- Uncurbed roads – where feasible, build uncurbed roads using vegetated swales as an alternative.
- Urban curb/swale system – runoff runs along a curb and enters a surface swale via a curb cut, instead of entering a catch basin to the storm drain system.
- Dual drainage system – a pair of catch basins with the first sized to capture the water quality volume into a swale while the second collects the overflow into a storm drain.
- Concave medians – median is depressed below the adjacent pavement and designed to receive runoff by curb inlets or sheet flow. Can be designed as a landscaped swale or a biofilter.
- Street Length – Reduce the length of residential streets by reviewing minimum lot widths and exploring alternative street layouts.
- Access – Consider access for large vehicles, equipment, and emergency vehicles when designing alternative street layouts and widths.
- Right-of-way – should reflect the minimum required to accommodate the travel lane, parking, sidewalk, and vegetation, if present.
- Permeable materials – use in alleys and on-street parking, particularly pull out areas.

## 4.5 Retrofit Case Studies

The impaired status of many of our surface waters can be linked directly to increased runoff volume and pollution loads from existing development. If impaired receiving waters are to be restored the impacts from existing development must be addressed. LID practices allow for retrofit of developed areas by integrating small-scale management techniques into the urban landscape (roads, sidewalks, parking areas, buildings, etc.). In most cases existing landscape features can simply be converted into bioretention systems for filtration, detention and infiltration. In more difficult cases storage can be provided under sidewalks and parking lots or on rooftops.

The most economical way to retrofit existing development is to ensure that all infill development, redevelopment and reconstruction projects include the LID practices. Over time as urban areas are redeveloped and rebuilt with LID practices much of the urban runoff can be treated greatly reducing water quality impacts and reducing flooding potential. The City of Portland, OR has evaluated such an urban retrofit program and has found over a 50-year period much of the City's runoff can be controlled and treated by green roofs and bioretention streetscape systems for roadway and parking lot runoff.

When selecting the most appropriate retrofit techniques it is important to select LID practices that can best address receiving water quality and volume needs. For example, where receiving waters are impaired by heavy metals or bacteria bioretention filtration and/or infiltration techniques would be most appropriate. Where volume control is necessary for detention porous surfaces or filtration devices in combination with underground storage detention and/or infiltration practices are best.

## 4.5.1 LID Retrofits in Connecticut

Retrofit and redevelopment projects utilizing LID techniques have been implemented throughout the country in recent years. Multiple projects have occurred in Connecticut. For example, a traffic-control project calling for access management adjacent to North Main Street in the City of Bridgeport, CT, incorporated rain gardens/bioretention and permeable pavement into project design. Specifically, North Main Street was narrowed and permeable pavement was installed alongside portions of the roadway to accommodate vehicular parking and treat stormwater runoff. Additionally, series of rain gardens were installed along the sidewalk to receive and treat stormwater runoff. Photographs of the LID techniques implemented along Main Street are provided as *Figure 4.14.*

*Figure 4.14* – Permeable pavement (left photograph) and rain garden/bioretention (right photograph) retrofits along North Main Street in Bridgeport, CT.

Another example of green infrastructure retrofit project is the Hartford Green Capitols project. This project focused on Connecticut's capitol building in Harford, CT and included installation of porous pavement, green roofs, and rain gardens, as well as rain harvesting techniques. Such techniques served to mprove water quality and educate state residents about green infrastructure. Photographs of the LID techniques implemented as part of the Hartford Green Capitols Project are provided as *Figures 4.15-4.17.*

*Figure 4.15* – Bioretention retrofit.

*Figure 4.16* – Construction of a rain garden at Hartford Green Capitols Project. Source: Camp Dresser & McKee.

*Figure 4.17* – Permeable pavement at Hartford Green Capitols Project. Source: Camp Dresser & McKee.

Additional examples of techniques used in Connecticut for both retrofit and redevelopment projects are provided as *Figure 4.18*.

Bioretention area at University of Connecticut Storrs Campus.

Roads are narrowed and permeable pavement is installed along roadways to provide additional parking and treat runoff.

*Figure 4.18* – Retrofit and redevelopment techniques in Connecticut. Source: Connecticut Department of Energy and Environmental Protection.

## 4.5.2 Water Quality LID Retrofits in Urbanized Residential Areas

LID retrofits are often used for the purposes of addressing water quality issues such as impairments due pathogens and nutrients from stormwater. For example, the Town of Warren Rhode Island is using a combination of bioswales and permeable pavement along Water Street as a part of infrastructure improvements to address beach closures at its town beach.

*Figure 4.19* – Before-and-after rendering of a green street retrofit for Water Street in Warren, Rhode Island.

The Warren Town Beach is located adjacent to the Warren River, west of Water Street, in the Town of Warren, Rhode Island. Water Street is developed for mixed uses including high-density residential, recreation, commerce, industry, marinas and the town's wastewater treatment facility. Historically, this beach experiences frequent beach closures due to elevated levels of bacteria. A 2008 study identified urban runoff and leaking sanitary sewers as a source of bacteria loadings to the Town Beach and Warren River. This project demonstrates the versatility of LID for solving water quality problems in complex and challenging settings.

*Figure 4.20*—Storm drains in the Shandon Neighborhood are undersized to handle significant rain events.

## 4.5.3 Flood Management with LID

Commonly, green infrastructure is used to solve stormwater quality (i.e., pollution) problems; however, it also presents enormous utility for control of stormwater quantity (i.e., flooding) problems. The Shandon-Rosewood Watershed in Columbia, South Carolina is more than 750 acres in size. This urbanized, residential area experiences severe flooding at five intersections during moderate and large storm events.

Initial analysis of area infrastructure showed the flooding was due to large expanses of hardscape (roads, sidewalks, roofs, etc.) served by a storm drain network that is undersized for the need. Storm drains surcharge as they are overloaded with large volumes of runoff and flood onto the road (See *Figure 4.20*).

Implementing a conventional drainage approach to solve this problem presents several disadvantages. The list below notes some of the more significant disadvantages:

- Conventional retrofits can be quite costly. The initial estimate for conventional retrofits was more than $11 million.
- Replacement of buried drain lines would have conflicted with other existing buried utilities, which would likely create inconvenience for neighborhood residents and add cost to the overall project.
- Discharge of additional flows of stormwater would have created flooding or other problems in down-gradient areas. Conventional fixes would need to be continued through such areas to avoid simply pushing flood water backups downstream.

An alternative to conventional improvements is to use a green infrastructure. Use of green infrastructure in this instance relied on an innovative use of pervious pavement draining to subsurface infiltration chambers. This approach limited disturbance of the existing landscape while using infiltration to mimic conditions of undeveloped land and abate flooding that was resulting from intensive development.

The selected approach provides a number of useful advantages:

- It is more cost effective than constructing conventional drainage infrastructure as it avoids more/larger pipes. Total cost will be approximately half of the traditional approach.
- By imitating natural hydrology, selected approach improves base flow and eliminates potential for increased downstream flooding.
- Infiltration provides stormwater treatment and mitigates stormwater pollution problems, which might otherwise require control via expensive treatment practices.
- Unlike conventional infrastructure retrofits, green infrastructure improvements can be installed in incrementally, as opportunity presents across the watershed.

# 5 Design Standards for Low Impact Development Controls

This section discusses design standards for LID controls. It provides a general description of each control, its advantages, general use, and standards for its application. These standards are intended to elaborate on the narrative description of LID best management practices provided in chapter 4 of the *Connecticut Stormwater Quality Manual*.

- Approaches that Optimize Conservation
    - Limits of Clearing and Grading
    - Preserving Natural Areas
    - Avoid Disturbing Long, Steep Slopes
    - Minimize Siting on Porous and Erodible Soils
- Approaches that Mimic Natural Water Balance
- Approaches that Minimize and Disconnect Impervious Surface
    - Roadways
    - Buildings
    - Parking Footprints
    - Parking Lot Islands
    - Permeable Pavement
    - Disconnecting Impervious Area
- Integrated Management Practices at the Source
    - Vegetated Filter Strips
    - Natural Drainage Ways
    - Green Roofs and Façade
    - Rain Barrels and Cisterns
    - Dry Wells
    - Bioretention and Rain Gardens
    - Infiltration

## 5.1 Approaches that Optimize Conservation

### 5.1.1 Limits of Clearing and Grading

Perhaps the most potentially destructive stage in land development is the preparation of a site for building—clearing of vegetation and soil grading (Schueler, 1995). The limits of clearing and grading refer to the part of the site where development will occur. This includes all impervious areas such as roads, sidewalks, rooftops, as well as areas such as lawn and open drainage systems.

To minimize impacts, the area of development should be located in the least sensitive areas available. At a minimum, developers should avoid streams, floodplains, wetlands, and steep slopes. Where practicable, developers should also avoid soils with high infiltration rates as these will aid in reducing runoff volumes.

Advantages

- Preserves more undisturbed natural areas on a development site.
- Uses techniques to help protect natural conservation areas and other site features.
- Promotes evapotranspiration and infiltration to reduce need for treatment and peak volume control at end-of-pipe.
- Reduces generation of stormwater.
- Helps to demonstrate compliance with regulatory standards (e.g., freshwater wetlands, coastal resources, water quality, wildlife, local environmental protection, etc.) for avoidance and minimization as well as setbacks from sensitive features.
- Maintains predevelopment hydrology, natural character and aesthetic features that may increase market value.
- Promotes stable soils.
- May reduce landscaping costs.

Use

Establishing a limit of disturbance based on maximum disturbance zone radii/lengths.
These maximum distances should reflect reasonable construction techniques and equipment needs together with the physical situation of the development site such as slopes or soils. Limits of disturbance may vary by type of development, size of lot or site, and by the specific development feature involved.

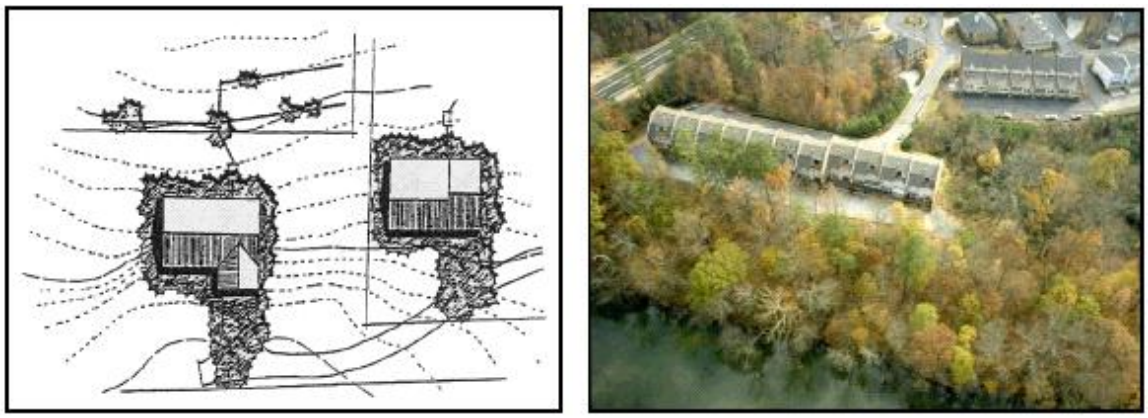

*Figure 5.1* - Reduced limits of disturbance minimize water quality impacts. Source: Atlanta Regional Commission, 2001.

Standards

Generally speaking, limits of disturbance are recommended to be not more than:

a) Area of the building pad and utilities (e.g., onsite wastewater treatment systems and wells) plus 25 feet.
b) Area of a roadbed and shoulder plus 9 feet. (This is not intended to limit lawn areas.)

### 5.1.2 Preserving Natural Areas

Natural areas include woodlands, riparian corridors, areas contiguous to wetlands and other hydrologically sensitive and naturally vegetated areas. To the extent practicable these areas should be preserved.

Natural areas can be one of the most important components within a development scheme, not only from a stormwater management perspective, but in reducing noise pollution and providing valuable wildlife habitat and scenic values. New development tends to fragment large tracts of undisturbed areas and displace plant and animal species; therefore it is essential to maintain these buffers in order to minimize impacts. Areas adjacent to waterbodies (both freshwater and coastal) are protected under state law and cannot be altered without a state agency permit.

Advantages

- Promotes evapotranspiration and infiltration to reduce need for treatment and peak volume control at end-of-pipe.
- Reduces generation of stormwater.
- Helps to demonstrate compliance with regulatory standards (e.g., freshwater wetlands, coastal resources, water quality, wildlife, local environmental protection, etc.) for avoidance and minimization as well as setbacks from sensitive features.
- Reduces safety and property-damage risks where flood hazard areas are incorporated into preservation.
- Maintains predevelopment hydrology, natural character and aesthetic features that may increase market value.
- Promotes stable soils.
- Establishes and maintains open space corridors.

Use

a) Check all federal, state and local enforceable policy to ensure proper setbacks and identification of preservation areas. Identify areas for preservation through site analysis using maps and aerial or satellite photography or by conducting a site visit.
b) Delineate areas for preservation via limits of disturbance before any clearing or construction begins and should be used to set the development envelope as well as guide site layout. Clearly mark areas for preservation on all construction and grading plans to ensure that equipment is kept out of these areas and that native vegetation is kept in an undisturbed state.
c) Protect preservation areas in perpetuity by legally enforceable deed restrictions, conservation easements and maintenance agreements.

*Figure 5.2* shows a site map with undisturbed natural areas delineated.

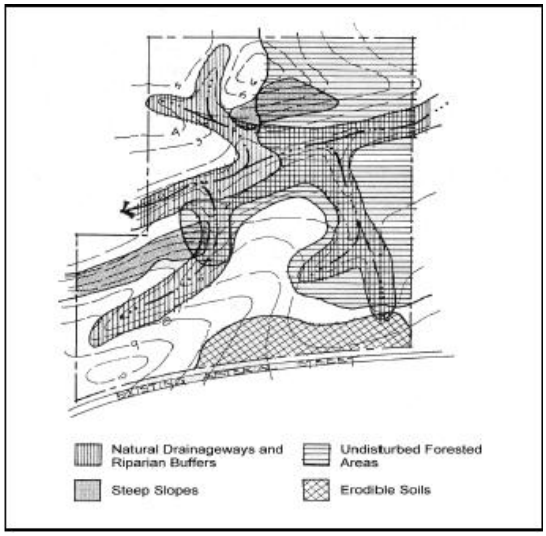


*Figure 5.2* – Site map with natural areas delineated. Source: Atlanta Regional Commission, 2001.

## Special Considerations

### *Riparian Buffers*

A riparian buffer is a special type of preserved area along a watercourse where development is restricted or prohibited. Buffers protect and physically separate a watercourse from development. Riparian buffers also provide stormwater control flood storage and habitat values. An example of a riparian buffer is shown in *Figure 5.3*. Wherever possible, riparian buffers should be sized to include the 100-year floodplain as well as steep banks and freshwater wetlands.

*Figure 5.3* – Riparian buffer along the French River, in Thompson, CT. Source: Connecticut Department of Energy and Environmental Protection.

Riparian buffers consist of three zones (see *Figure 5.4*):

- The inner zone consists of the jurisdictional riverbank wetland and should be sized accordingly. In addition to runoff protection, this zone provides bank stabilization as well as shading and protection for the stream. This zone should also include wetlands and any critical habitats, and its width should be adjusted accordingly. Permits should be sought for activities in the inner zone. Generally speaking, structural best management practices (BMPs) are not allowed in the inner zone.

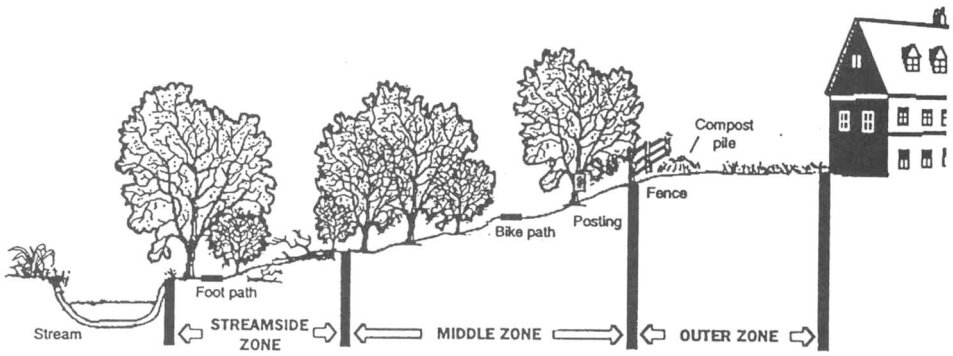


*Figure 5.4* – Three-zone riparian buffer. Source: Atlanta Regional Commission, 2001.

- The middle zone provides a transition between upland development and the inner zone and should consist of managed woodland that allows for infiltration and filtration of runoff. A 25-foot width is recommended for this zone at a minimum. Forested riparian buffers should be maintained and reforestation should be encouraged where no wooded buffer exists. Proper restoration should include all layers of the forest plant community, including understory, shrubs and groundcover, not just trees.
- An outer zone allows more clearing and acts as a further setback for impervious surfaces. It also functions to prevent encroachment and filter runoff. A 25-foot width is recommended for this zone.

Ideally, all three zones of the riparian buffer should remain in their natural state. However, some maintenance is periodically necessary, such as planting to minimize concentrated flow, the removal of exotic plant species when these species are detrimental to the vegetated buffer and the removal of diseased or damaged trees.

*Floodplains*

Floodplains are the low-lying flatlands that border streams and rivers. When a stream reaches its capacity and overflows its channel after storm events, the floodplain provides for storage and conveyance of these excess flows. In their natural state they reduce flood velocities and peak flow rates by the passage of flows through dense vegetation. Floodplains also play an important role in reducing sedimentation and filtering runoff, and provide habitat for both aquatic and terrestrial life. Development in floodplain areas can reduce the ability of the floodplain to convey stormwater, potentially causing safety problems or significant damage to the site in question, as well as to both upstream and downstream properties.

As such, floodplain areas should be avoided on a development site. Ideally, the entire 100-year floodplain at full buildout should be avoided for clearing or building activities, and should be preserved in a natural undisturbed state where possible. Maps of the 100-year floodplain can typically be obtained through the local review authority.

Standards

*General*

a) No disturbance shall occur to preservation areas during project construction.

b) Preserved areas shall be protected by limits of disturbance clearly shown on all construction drawings and clearly marked on site.

c) Preservation areas shall be located within an acceptable conservation easement instrument that ensures perpetual protection of the proposed area. The easement must clearly specify how the natural area vegetation shall be managed and boundaries will be marked. [Note: managed turf (e.g., playgrounds, regularly maintained open areas) is not an acceptable form of vegetation management.]

d) Preservation areas shall have a minimum contiguous area of 10,000 square feet or in the case of stream buffers should maintain a 50-foot set back from the jurisdictional wetland edge along the entire length of stream through the property of concern. Areas of smaller size may be incorporated for disconnection of impervious surface, but will be considered as open space in good condition.

e) Incorporate level spreaders or other dispersion devices, where practicable, to ensure sheet flow. See *Figure 5.5*, which depicts a level spreader. (Please note that the level spreader shown here is for dispersion of low flows only.

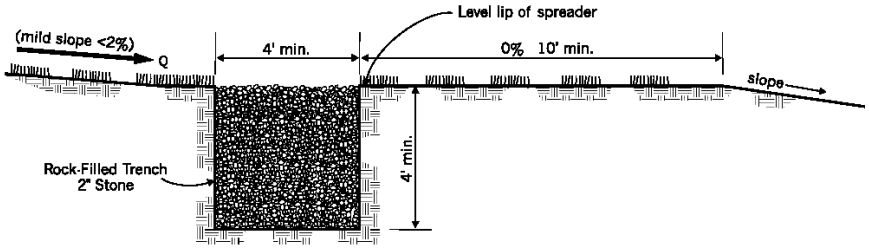


*Figure 5.5* – Rock trench level spreader for low flows. Source: Prince George's County, Maryland, 2000.

f) Include bypass mechanisms for higher flow events to prevent erosion or damage to a buffer or undisturbed natural area.

g) Consider incorporating constructed berms around natural depressions and below undisturbed vegetated areas to provide for additional runoff storage and infiltration. Proper use of berms is discussed in the section entitled vegetated filter strips.

h) Where no berms are provided in Hydrologic Soil Group (HSG) type A and B soils, buffers may be used to attenuate and treat flows up to the water quality volume (i.e., volume equal to one inch over the impervious surface) in the following ratios:

Table 5.1
Ratio of Forested Buffer to Impervious Surface Required to Attenuate Runoff for Precipitation between 0.5 and 1.0 Inches[a, b]

| HSG Soil Type | | | | |
|---|---|---|---|---|
| Runoff (inches) | A | B | C | D |
| 1.0 | 1:3 | 2:1 | N/A | N/A |
| 0.9 | 1:4 | 1:1 | N/A | N/A |
| 0.8 | 1:6 | 2:3 | N/A | N/A |
| 0.7 | 1:9 | 2:5 | N/A | N/A |
| 0.6 | 1:15 | 1:4 | 1:1 | N/A |
| 0.5 | 1:25 | 1:8 | 1:2 | N/A |

Notes:
[a]Buffer size calculations based on TR-55. Calculations for precipitation depths less than 0.5 inches are not included as the empirical equations of TR-55 become less accurate for storms less than 0.5 inches.
[b]Standards for buffer width, area and length of contributing flow path, etc. must be met regardless of soil's capacity to attenuate flow.

i) Land cover in buffers will be assumed to be woods in good condition (i.e., Curve number (CN) equal to 32 in type A soil and 55 in type B soil). Type C and D may not be used for this purpose as woods on these soil types cannot abstract the depth of rainfall associated with one inch of runoff from the impervious surface.
j) Runoff must enter the buffer as overland sheet flow. The average contributing slope should be no less than 1% and no more 3%. Maximum average slope may be increased to 5% if a flow spreader is installed across the entire contributing length followed by a flat (i.e., 0% slope) 10-foot shelf across the length.

*Streambank Areas*

a) The minimum undisturbed buffer width should be at least the wetland jurisdictional setback plus 50 feet.

*Maintenance*

Except for routine debris removal, buffers shall remain in a natural and unmanaged condition.

## 5.2 Approaches that Mimic Natural Water Balance

LID controls mimic natural predevelopment hydrology in order to retain and attenuate stormwater runoff in upland areas. This reduces the amount of stormwater and intensity of flow at points of discharge. Flow attenuation prevents physical damage to waterways and reduces nonpoint source pollution. The remainder of *Section 5.2* discusses approaches for mimicking a site's natural water balance or predevelopment hydrology as a LID control.

Advantages

- Decreased need for constructed BMPs.

- Maintain predevelopment hydrology and thus reduces generation of stormwater and associated pollution.
- Encourage groundwater recharge.

Use

Mimicking predevelopment site hydrology involves a process of comparing and evaluating pre- and postdevelopment conditions that takes place in all stages of site planning. There are many methods of hydrologic analysis. This section of the manual relies on the use of the USDA-SCS Technical Release-55 (TR-55), entitled *Urban Hydrology for Small Watersheds* (1986).

*Time of Concentration and Time of Travel*

TR-55 focuses on the time of concentration (Tc) as a primary influence in the shape and peak of runoff hydrographs. TR-55 defines time of concentration as the "time for runoff to travel from the hydraulically most distant point of the watershed to a point of interest within the watershed."

Tc is calculated as follows:

$$t_c = t_t(1) + t_t(2) + t_t(3) \ldots + t_t(n)$$

Where:

Tt (travel time) = time it takes runoff to move across a segment of the watershed.
n = total number of travel segments in a watershed

Tt is mathematically defined by TR-55 as being directly influenced by two factors velocity of runoff (V) and length of runoff flow path (L). Velocity is further defined as a function of slope (s) and surface roughness (i.e., Manning's roughness coefficient for sheet flow) (n).

Tt is calculated as follows:

$$t_t = \frac{L}{3600V}$$

Where:

$t_t$ = travel time in hours
L = flow length in feet
V = average velocity in feet per second
3600 = conversion factor for seconds to hours

*Total Volume and Peak Discharge*

TR-55 also notes that total runoff volume (Q) and peak runoff discharge ($q_p$) tend to increase as a result of urbanization. Peak discharge is defined as a factor of Q and can be calculated using as follows:

$$q_p = q_u A_m Q F_p$$

Where:

$q_p$ = peak discharge in cubic feet per second
$q_u$ = unit peak discharge
$A_m$ = drainage area in square miles
Q = runoff in inches
$F_p$ = pond and swamp adjustment factor

Q is derived as a factor of initial abstraction (Ia) and retention (S) and is calculated as follows:

$$Q = \frac{(P - I_a)^2}{(P - I_a) + S}$$

Where:

Q = runoff in inches
P = rainfall in inches
S = retention
$I_a$ = initial abstraction

Initial abstraction is a measure of rainfall held in surface depressions, interception by vegetation, evapotranspiration and infiltration prior to the occurrence of runoff and is calculated as follows:

$$I_a = 0.02S$$

Where:

Ia = initial abstraction
S = retention

Retention is a measure of total capacity for rainwater storage in a watershed during a rain event. In small agricultural watersheds retention is typically about 5 times greater than initial abstraction.

Retention is calculated as follows:

$$S = \frac{1000}{CN} - 10$$

Where:

S = retention
CN = curve number

Curve number is a coefficient ranging from 0 - 100, which is used to represent the conversion of rainfall to runoff. For example, an impervious surface such as concrete has a CN of 98, which is analogous to representing that 98% of rain that falls on concrete runs off.

*Identifying Hydrologic Benefits*

All nonstructural and distributed BMPs have one or more hydrologic benefits in relationship to TR-55. *Table 5.2*) summarizes key hydrologic benefits of nonstructural and distributed BMPs recommended in this manual.

Table 5.2
Hydrologic Benefits of
Nonstructural and Distributed Techniques and Controls

| Techniques & Controls | Decrease Curve Number | Reduce Slope | Lengthen Flow Path | Increase Roughness | Increase Initial Abstraction | Increase Total Retention |
|---|---|---|---|---|---|---|
| Reduce Limits of Clearing and Grading | ●[a] | | ◐[b] | ● | ● | |
| Preserve Natural Features | ● | | ● | ● | ● | |
| Avoid Long, Steep Slopes | | ● | ◐ | | ● | |
| Avoid Erodible Soils | | | | ● | ● | |
| Avoid Porous Soils | ◐ | | | ● | ● | |
| Minimize Roadways | ● | | ◐ | ● | ● | |
| Minimize Buildings | ● | | ● | ● | ● | |
| Minimize Parking | ● | | ● | ● | ● | |
| Disconnect Impervious Area | ● | | ◐ | ◐ | ● | |
| Buffers and Undisturbed Areas | ● | | ● | ● | ● | ● |
| Infiltration Swales | ● | ◐ | ◐ | ● | ● | ● |
| Vegetative Filter Strips | ● | | | ● | ● | ● |
| Bioretention | ● | | | | ● | ● |
| Nonstructural Conveyances | ● | | ◐ | ● | ● | |
| Drain Rooftop Runoff to Pervious Areas | | | ● | ● | ● | |
| Rain Barrels and Cisterns | | | | | ● | ● |
| Dry Wells | | | | | ● | ● |
| Green Roofs and Walls | | | | | ● | ● |

Notes
[a] Benefit always occurs.
[b] Benefit occurs sometimes.

Standards

*Time of Concentration*
The postdevelopment time of concentration ($T_c$) should approximate the predevelopment $T_c$.

*Travel Time*
The travel time ($T_t$) throughout individual lots and areas should be approximately constant.

*Flow Velocity*
Flow velocity in areas that are graded to natural drainage patterns should be kept as low as possible to avoid soil erosion.

Flows can be disbursed by installing a level spreader along the upland ledge of the natural drainage way buffer, and creating a flat grassy area about 30 feet wide on the upland side of the buffer where runoff can spread out. This grassy area can be incorporated into the buffer itself.

*Figure 5.6*– Alternative roadway design in Waterford, CT. Source: Tom Walsh, Shoreline Aerial Photography.

## 5.3 Approaches to Minimizing and Disconnecting Impervious Surface

A key concept of LID is the minimization and disconnection of impervious surface. For the purposes of stormwater management, impervious surfaces are commonly considered to include roads, parking lots, and buildings.

### 5.3.1 Roadways

The greatest share of impervious cover in most communities is from paved surface such as roads and sidewalks. Roadway lengths and widths should be minimized on a development site where possible to reduce overall impervious surface.

Numerous alternatives create less impervious cover than the traditional 40-foot cul-de-sac. These alternatives include reducing cul-de-sacs to a 30-foot radius and creating hammerheads, loop roads, and pervious islands in the cul-de-sac center (see *Figures 5.7 through 5.9*).

Advantages
- Reduces the amount of impervious cover and associated runoff and pollutants generated.
- Reduces the costs associated with road construction and maintenance.

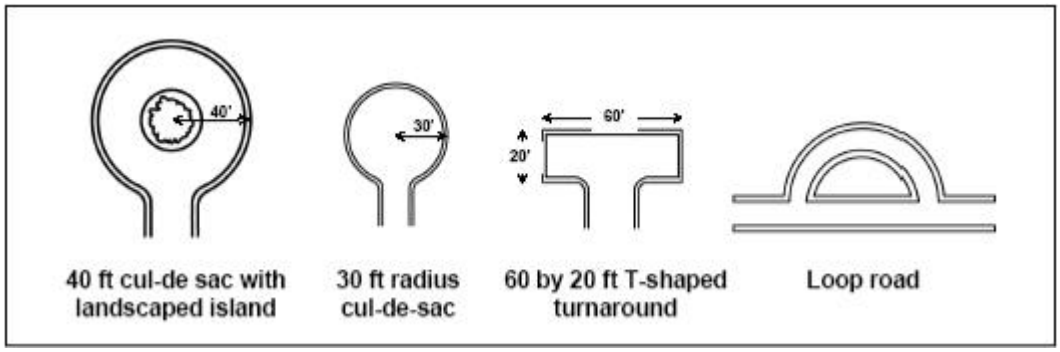


*Figure 5.7* – Different styles of turnarounds. Source: Atlanta Regional Commission, 2001.

*Figure 5.8* – Cul-de-sac infiltration island accepts stormwater from surrounding pavement. Note flat curb. Source: Connecticut, 2005.

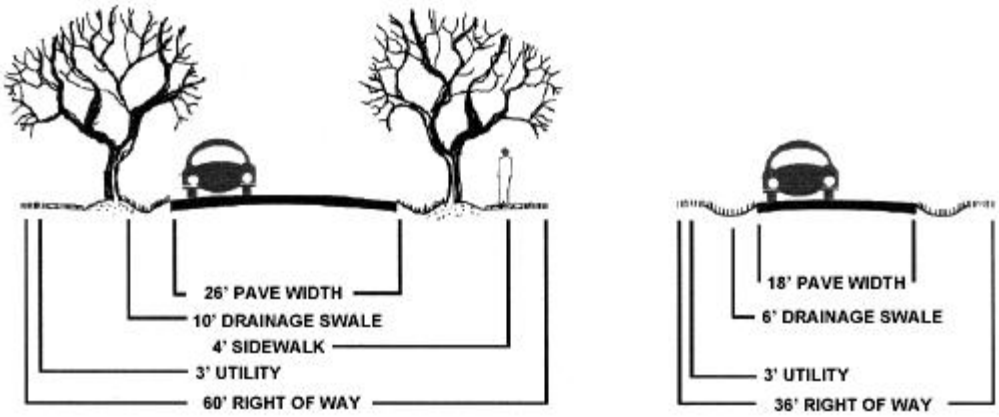


*Figure 5.9* – Reduced road widths. Source: Atlanta Regional Commission, 2001.

Use

Examine local ordinances and other requirements to determine standards and degree of flexibility available. Communities may have specific standards for setbacks and frontages or criteria for cul-de-sacs and other alternative turnarounds.

*Reduce Roadway Lengths and Widths*

1. Consider site and road layouts that reduce overall street length.
2. Minimize street width by using narrower street designs as appropriate. Issues to consider include design speed, number of average daily trips (ADT), peak usage, need for on-street parking, sidewalks, design speed and right of way (see *Table 5.3*).

*Reduce Surface Area of End-of-Street Turnarounds*

1. Consider types of vehicles that may need to access a street. Sufficient turnaround area is a significant factor to consider in the design of cul-de-sacs. Fire trucks, service vehicles and school buses are often cited as needing large turning radii. However, some fire trucks are designed for smaller turning radii. In addition, many newer large service vehicles are designed with a tri-axle (requiring a smaller turning radius) and school buses usually do not enter individual cul-de-sacs.
2. Minimize pavement at end-of-street turnarounds. Incorporate landscaped areas and consider alternatives to cul-de-sacs wherever practicable.

Standards

*Reduce Roadway Lengths and Widths*

*Table 5.3* shows a recommended standard for five categories of street. Streets are categorized based on ADT and density of dwelling units (row 1 in the table).

Table 5.3
Roadway Design Standards for Five Street Types

| Design Factor | Access | Local | Collector | Arterial |
|---|---|---|---|---|
| ADT | 0 – 500 | 500 – 5,000 | 2,500 – 10,000 | 7,500 – 20,000+ |
| Number of Lanes | 2 | 2 | 2 | 2 – 4 |
| Turn lanes | None | None | Left (when needed) | Left and Right (when needed) |
| Lane Width (feet) | 9 – 10 | 10 – 11 | 10 – 12 | 11 – 12 |
| On-Street Parking (feet) | None | 7 (parallel) | 8 (parallel)<br>16 – 18 (angle) | None except for CBD |
| Drainage | Swale or curb/gutter | Swale or curb/gutter | Swale or curb/gutter | Swale or curb/gutter |
| Target Speed (MPH) | 15 – 20 | 25 | 25 – 35 | 30 – 45 |
| Bicycle Lanes | None | Shared | Shared or separate | Yes |
| Sidewalks | None or one-side | Two side | Two side | One side |
| Frontage Lots | Yes (may be rear) | Yes | Yes | Some |

Average Daily Trips (ADT) = 10 x Number of Dwelling Units
Peak Trips Per Hour = Number of Dwelling Units

Local zoning may supersede these recommendations. Although, these recommended standards are intended to account for safety and snow disposal, greater widths may be appropriate in some instances.

*Reduce Surface Area of End-of-Street Turnarounds*
Where cul-de-sacs are necessary, radii should be no more than 30 feet. Alternatives such as hammerheads, jug handles and donuts should also be considered.

## 5.3.2 Buildings

Imperviousness associated with buildings and accessories such as driveways can often be reduced with considerate planning in the early stages of site design. The techniques below should be considered and applied wherever practicable.

Advantages

- Reduces the amount of impervious cover and associated runoff and pollutants generated.

Discussion

*Footprints*
The building footprint is the surface area of ground covered by structure. The impervious footprint of commercial buildings and residences can be reduced by using multistory buildings. In comparison to single-story buildings, multistory buildings maintain floor area while covering less ground surface. Use alternate or taller building designs to reduce the impervious footprint of buildings. For example, in residential areas, consider colonial style homes instead of ranches.

*Setbacks and Frontages*
Driveways generally extend from a roadway to a house. Therefore, driveway length is typically determined by building setback requirements. Driveways are noted to contribute up to 30 percent of impervious cover in residential areas (Schueler, 1995). Setback requirements of up to 75 feet are not uncommon. Notwithstanding, a driveway length of 20 to 30 feet is generally adequate to meet parking needs. A driveway width of 18 feet is generally adequate for parking two cars side-by-side.

Further, reducing side-yard widths and using narrower frontages can reduce total street length, especially important in cluster and open space designs. *Figure 5.10* shows residential examples of reduced front and side yard setbacks and narrow frontages.

*Figure 5.10* – Reduced side yards and frontage at a development in Connecticut.

Flexible lot shapes and setback and frontage distances allow site designers to create attractive and unique lots that provide homeowners with enough space while allowing for the preservation of natural areas in a residential subdivision. *Figure 5.11* illustrates various nontraditional lot designs.

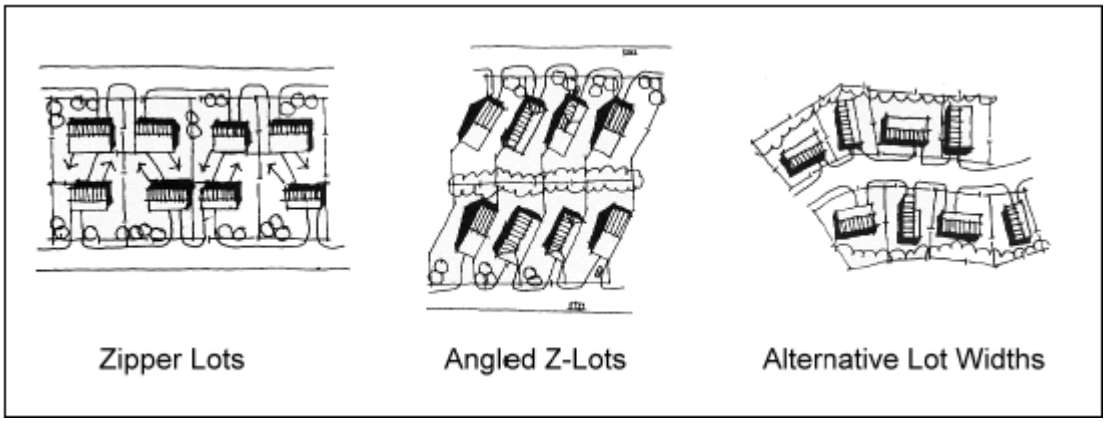


*Figure 5.11* – Examples of nontraditional lot designs. Source: Adapted from Atlanta Regional Commission, 2001.

Use

Use smaller front and side setbacks and narrower frontages to reduce total road length and driveway lengths.

Reduce building and home front and side setbacks to allow for narrow frontages. Consider narrower frontages.

a) Consider alternative build styles that reduce ratio of footprint to floor area.
b) Review local regulations. Communities may have specific design criteria for setbacks and frontages.
c) Minimize setbacks and lot frontages.

Standards

a) Where practicable, reduce building setbacks to 20 - 30 feet and driveway widths to 18 feet.
b) Where practicable, reduce frontages to 60 feet.

### 5.3.3 Parking Footprints

Setting maximums for parking spaces, minimizing stall dimensions, using structured parking and encouraging shared parking and using alternative porous surfaces can reduce the overall parking footprint and site imperviousness.

Advantages

- Reduces the amount of impervious cover and associated runoff and pollutants generated.

Use and Standards

Apply the following approach:

Examine local ordinances and other requirements to determine standards and degree of flexibility available. Communities may have specific standards for parking stall size and number of parking spaces. There may also be prohibitions against shared parking.

*Use Average Demand to Size Lots*

a) Many parking lot designs result in far more spaces than actually required. This problem is exacerbated by a common practice of setting parking ratios to accommodate the highest hourly parking during the peak season. By determining average parking demand instead, a lower maximum number of parking spaces can be set to accommodate most of the demand.

b) If no local standards require a minimum number of spaces, apply the standards in *Table 5.4* as a maximum number of spaces.

Table 5.4
Recommended Maximum Number of Parking Spaces for Certain Land Uses

| Land Use | Maximum Parking Spaces |
|---|---|
| Single Family House | 2 per DU[a] |
| Shopping Center | 5 per 1000 $ft^2$ GFA[b] |
| Convenience Store | 3.3 per 1000 $ft^2$ GFA |
| Industrial | 1 per 1000 $ft^2$ GFA |
| Medical Dental | 5.7 per 1000 $ft^2$ GFA |

Source: Georgia Stormwater Manual, 2002.
Notes:
[a] DU means dwelling unit.
[b] GFA means gross floor area.

*Minimize Parking Stall Size*
Another technique to reduce the parking footprint is to minimize the dimensions of the parking spaces. This can be accomplished by reducing both the length and width of the parking stall.

Parking stall dimensions can be further reduced if compact spaces are provided. While the trend toward larger sport utility vehicles (SUVs) is often cited as a barrier, stall width requirements in most local parking codes are much larger than the widest SUVs.

*Figure 5.12* – Parking deck – New Haven,

*Use Parking Decks*
Structured parking decks can significantly reduce the overall parking footprint by minimizing surface parking. *Figure 5.12* shows a parking deck used for a commercial development.

*Encourage Shared Parking*
Shared parking in mixed-use areas and structured parking are techniques that can further reduce the conversion of land to impervious cover. For developments and blocks with a mix of land uses, perform a shared parking analysis in order to determine the peak demand for spaces for all uses rather than calculating each separately. Often mixed uses may be complimentary with regards to parking. For example, the peak demand for office buildings occurs during the period of minimal demand for residential buildings. The Urban Land Institute publication *Shared Parking,* Second Edition, 2005 provides a detailed methodology in order to determine the peak hour of parking demand and the overall number of spaces required for a mixed use development. This may reduce the number of spaces required by up to 20 percent.

## 5.3.4 Parking Lot Islands

A parking lot island is an area within a parking lot that can accommodate stormwater management practices and reduce impervious surfaces (see *Figure 5.13*). Parking lot islands include small-scale management practices such as filter strips, dry swales, sand filters and bioretention.

Advantages

- Reduces the amount of impervious cover and associated runoff and pollutants generated.
- Provides an opportunity for the siting of structural control facilities.
- Trees in parking lots provide shading for cars and are more visually appealing.

Use

- Break up expanses of parking with landscaped islands, which include shade trees and shrubs.
- Fewer large islands will sustain healthy trees better than more numerous very small islands.

*Figure 5.13* – Bioretention in use as a parking lot island in Branford, CT. Source: Connecticut Department of Energy and Environmental

Structural control facilities such as filter strips, dry swales and bioretention areas can be incorporated into parking lot islands. Stormwater is directed into these landscaped areas and temporarily detained. The runoff then flows through or filters down through the bed of the facility and is infiltrated into the subsurface or collected for discharge into a stream or another stormwater facility. These facilities can be attractively integrated into landscaped areas and can be maintained by commercial landscaping firms.

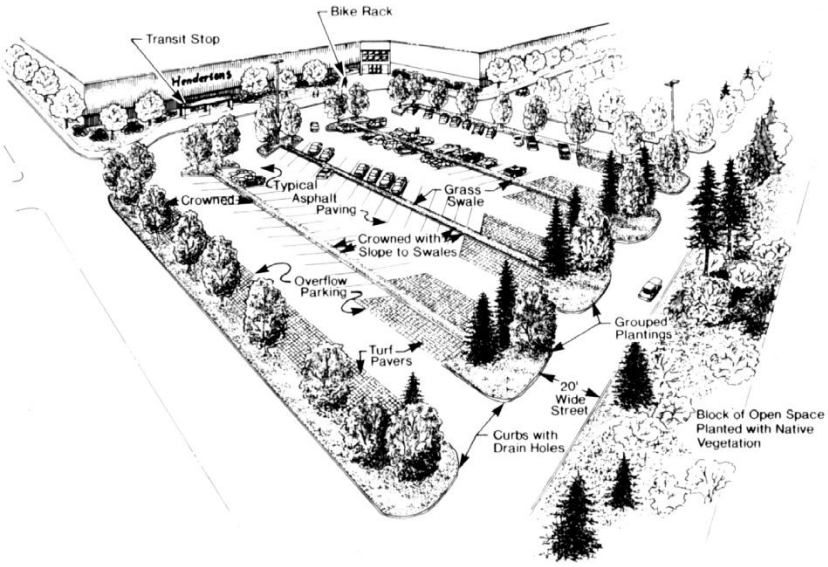


*Figure 5.14* – Parking lot with integrated functional parking islands. Source: Connecticut, 2004.

Standards

Parking lot islands should:

a) Be at least 8 feet wide.
b) Be constructed with sub-surface drainage or an overflow to a storm drainage system to accommodate larger flows.
c) Incorporate compaction resistant soil.

## 5.3.5 Porous Surfaces

*Figure 5.15* – Permeable pavement. Source: Connecticut Department of Energy and Environmental Protection, 2004.

Porous surfaces are designed to allow rain and snowmelt to pass through it, thereby reducing runoff, promoting groundwater recharge, and filtering pollutants. Common types of porous surfaces include:

- Porous asphalt or concrete
- Modular concrete paving blocks
- Modular concrete or plastic lattice
- Soil enhancement technologies
- Cast-in-place concrete grids
- Other materials such as gravel, cobbles, wood, mulch, brick, and natural stone.

Permeable pavement is only recommended for sites that meet the following criteria:

- Low-traffic applications (generally 500 or fewer average daily trips or ADT).
- The underlying soils are sufficiently permeable (see Design Considerations below).
- Road sand is not applied.

Porous asphalt or concrete (i.e., porous pavement or gap-graded pavement), which looks similar to traditional pavement but is manufactured without fine materials and incorporates additional void spaces, are recommended for certain applications due to their potential for clogging and failure in cold climates.

Generally, runoff from adjacent areas should be directed away from permeable pavement by grading the surrounding landscape away from the site or by installing trenches to collect the runoff.

Regular maintenance is essential for long-term performance (sweeping, vacuum cleaning).

Advantages

- Reduces the amount of impervious cover and associated runoff and pollutants generated.
- Can reduce the cost associated with road and parking lot construction by eliminating or reducing the reliance on storm drainage infrastructure.

Use

a) Applicable to small drainage areas.
b) Low traffic (generally 500 ADT or less) areas of parking lots (i.e., overflow parking for malls and arenas), driveways for residential and light commercial use, walkways, bike paths, and patios.
c) Roadside right-of-ways and emergency access lanes.
d) Useful in stormwater retrofit applications where space is limited and where additional runoff control is required.
e) In areas where snow plowing is not required.

Standards

Chapter 11 of the *Connecticut Stormwater Quality Manual* includes specific design standards and considerations for permeable pavement. Addition design considerations include:

- General Design – Porous surface options include pavers, asphalt and other hard surfaces suitable for street and sidewalk design. The current Town specifications address porous asphalt; however, other forms of porous surfaces may be accepted by the Town at the discretion and approval of the Town Engineer. Generally, the Town anticipates that applications of porous surface, other than porous asphalt, will be designed and installed to the specification of their manufacturer. Installers shall have a minimum of three successful completions of comparably sized and type of projects within the last five years.

- Porous Asphalt – Porous asphalt shall be installed by a porous asphalt pavement installer with a minimum of three successful completions of comparably sized and type of projects within the last five years. Porous asphalt paving shall be provided according to materials, workmanship, testing, and other applicable requirements of the University of New Hampshire Stormwater Center "Design Specifications for Porous Asphalt Pavement and Infiltration Beds" (see *Appendix C*). Post-installation testing shall include application of clean water at the rate of at least five gallons per minute over the surface using a hose or other water distribution device. Water used shall be clean and free of suspended solids and deleterious liquids. Generally, tap water is appropriate for these purposes. All water applied shall infiltrate directly without the formation of large puddles and shall be observed and certified by the design engineer for the subject project.

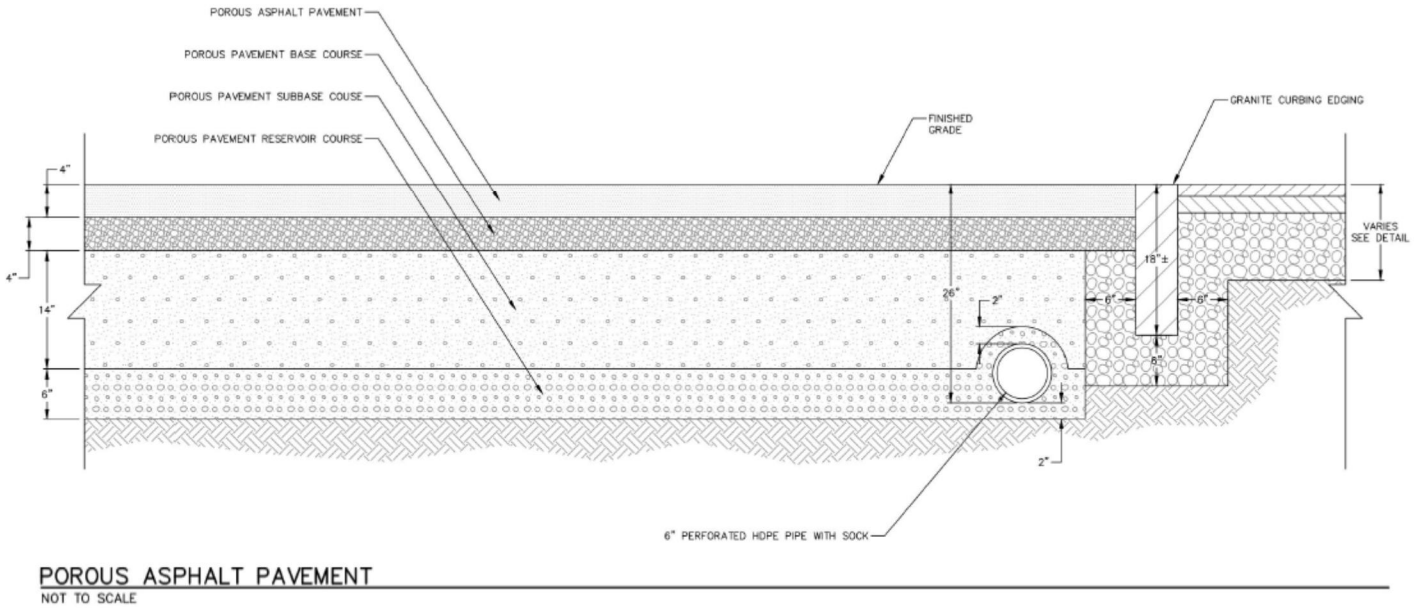


*Figure 5.16*– Standard design for Porous Asphalt

## 5.3.6 Disconnecting Impervious Areas

Impervious surfaces that are separated from drainage collection systems by pervious surface or infiltration BMPs contribute less runoff and reduced pollutant loading. Isolating impervious surfaces promotes infiltration and filtration of stormwater runoff.

Advantages

- Promotes evapotranspiration and infiltration to reduce need for treatment and peak volume control at end-of-pipe.
- Reduces generation of stormwater.
- Maintains predevelopment hydrology, natural character and aesthetic features that may increase marketability and property values.

Use

Use the following techniques to disconnect impervious surfaces from stormwater collection systems:

a) Direct roof runoff and runoff from paved surfaces to stabilized vegetated areas such as buffers.
b) Direct runoff from large impervious surfaces (over 5000 square feet) to more than one receiving area.
c) Encourage sheet flow through vegetated areas.

Standards

*General*

a) Disconnect impervious surfaces to the extent practicable.
b) Up to the first inch of runoff from an impervious surface may be disconnected to a pervious surface such as a lawn.

Table 5.5
Ratio of Open Space: Pervious Area Necessary to Attenuate Surface Runoff for Runoff Between 0.5 and 1.0 Inches[a, b]

| Runoff (inches) | HSG Soil Type | | | |
|---|---|---|---|---|
| | A | B | C | D |
| 1.0 | 1:2 | 4:1 | N/A | N/A |
| 0.9 | 1:3 | 2:1 | N/A | N/A |
| 0.8 | 1:4 | 1:1 | N/A | N/A |
| 0.7 | 1:8 | 1:2 | N/A | N/A |
| 0.6 | 1:8 | 1:3 | 2:1 | N/A |
| 0.5 | 1:8 | 1:6 | 1:1 | N/A |

Notes:
[a]Buffer size calculations based on TR-55. Calculations for precipitation depths less than 0.5 inches are not included as the empirical equations of TR-55 become less accurate for storms less than 0.5 inches.
[b]Standards for buffer width and length of contributing flow path, etc. must be met regardless of soil's capacity to attenuate flow.

c) Relatively permeable soils (hydrologic soil groups A and B) must be present for disconnection. Assume that the pervious surface is open space in good condition (i.e., CN of 39 for HSG A and 61 for HSG B). (If a forested buffer is being used refer to "Preserving Natural Areas" for appropriate standards.) The following impervious to pervious area ratios should be used. Type C and D may not be used for this purpose as open space on these soil types does not abstract the rainfall required to generate one inch of runoff from the impervious surface.
d) The maximum contributing impervious flow path length should be no more than 75 feet.
e) The disconnected area should drain continuously through a vegetated channel, swale, or filter strip to the property line or structural stormwater control.
f) Flow from the impervious surface must enter the downstream pervious area as sheet flow.
g) The length of the disconnected area should be equal to or greater than the contributing length.
h) The entire disconnected area should maintain a slope less than or equal to 5 percent.
i) The surface of the contributing imperviousness area should not exceed 5,000 square feet.

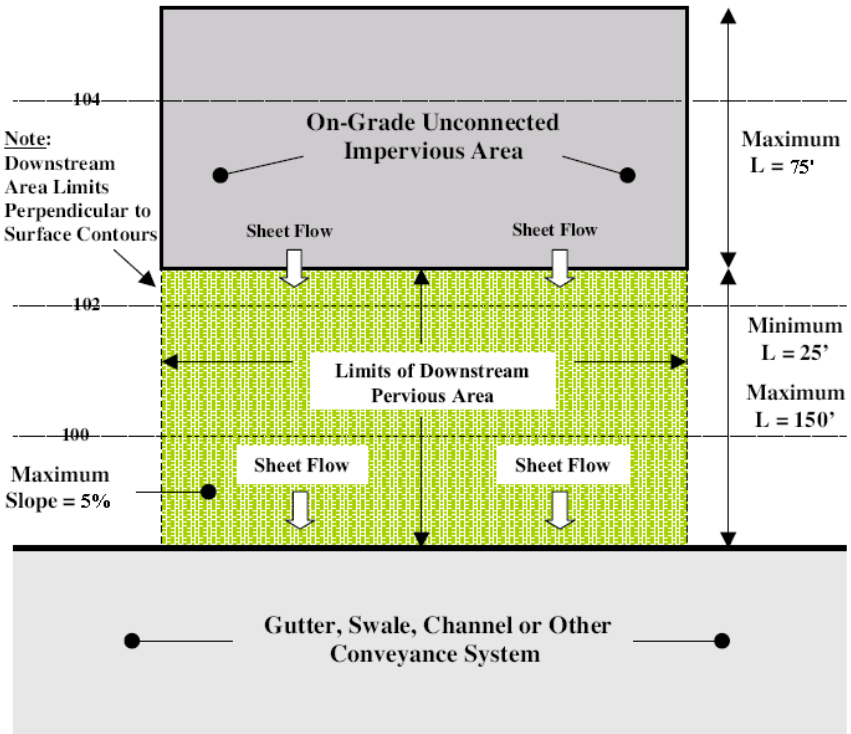


*Figure 5.17* – Standards for disconnecting impervious surface via sheet flow. Source: New Jersey Department of Environmental Protection, 2004.

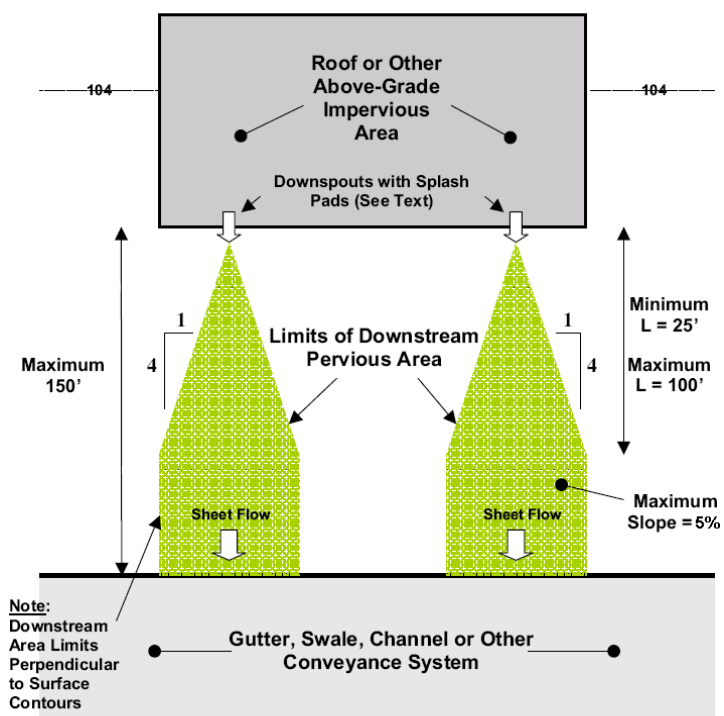


*Figure 5.18* – Standards for disconnecting impervious surface via downspouts. Source: New Jersey Department of Environmental Protection, 2005.

*Downspouts*

a) Downspout outfall expands in width at a rate of 1:4 for a maximum length of 100 feet and a minimum length of 25 feet.
b) No downspout may drain more than 600 square feet of roof.
c) Downspouts should be at least 10 feet away from the nearest impervious surface (e.g., driveways) to discourage reconnections to those surfaces.
d) Downspouts must be equipped with splash pads, level spreaders, or dispersion trenches that reduce flow velocity and induce sheet flow in the downstream pervious area.

## 5.4 Using Management Practices at the Source

### 5.4.1 Vegetated Filter Strips

A vegetated filter strip is an undisturbed densely vegetated area (e.g., well-tended lawn) contiguous with a developed area. These filter strips are most often located between a water resource and the developed portion of a site (see *Figure 5.19*).

*Figure 5.19* – Vegetative filter strip. Source: Clemson University http://www.clemson.edu/extension/horticulture/nursery/remediation_technology/veg_buffer_strip.html.

Advantages
Filter strips serve to improve runoff water quality, add or maintain wildlife habitat, and provide a screening effect for homeowners. This type of BMP is best suited for complementing other structural methods utilized on-site for stormwater management.

Use
Filter strips can be composed of an undisturbed-forested area or created from disturbed land by proper seeding and plantings. Where grass is being used, the most effective pollutant removal filter strip is composed of dense grassy vegetation that is properly maintained

Channelization of runoff within the filter strip significantly reduces the amount of infiltration and subsequent pollutant removal. Filter strips must have a level-spreading device incorporated into the design. Caution must be used when installing level spreaders to ensure long-term even flow and distribution of runoff to the filter strip. See *Figure 5.5* for an example of a level spreader. Low volume pedestrian pathways may be constructed through a buffer strip, provided they are no greater than 5 feet wide and take a winding course to reduce the potential for channelized runoff flow. Pesticides should not be applied in these areas, although minimal, fertilizer use is acceptable to help seeded areas become more quickly established. Incorporating organic material, such as mulch, into the topsoil is encouraged to promote better filter strip performance.

Soils with a high content of organic material will attenuate greater amounts of pollutants from stormwater runoff.

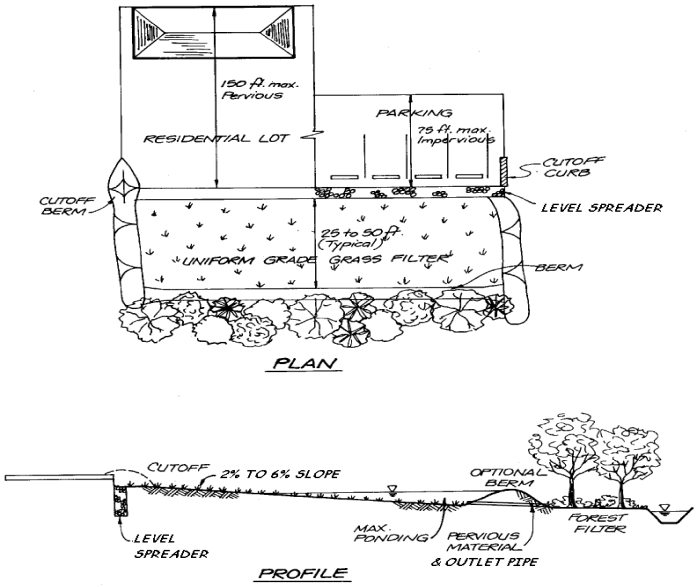


*Figure 5.20* – Drawing of a vegetative filter strip. Source: Atlanta Regional Commission, 2001.

Standards

Chapter 11 of the *Connecticut Stormwater Quality Manual* includes specific design standards and considerations for vegetative filter strips, which should be followed when implementing these BMPs.

## 5.4.2 Natural and Vegetated Drainage Ways

Structural drainage systems and storm sewers are designed to be hydraulically efficient for removing stormwater from a site. However, in doing so, these systems tend to increase peak runoff discharges, flow velocities and the delivery of pollutants to downstream waters. An alternative is the use of natural drainage ways such as grass natural drainage systems (see *Figure 5.21*).

*Figures 5.21* – Vegetated drainage way. Photograph courtesy of the University of Connecticut NEMO program, Kara Bonsack

The use of natural open channels allows for more storage of stormwater flows on-site, lower stormwater peak flows, a reduction in erosive runoff velocities, infiltration of a portion of the runoff volume, and the capture and treatment of stormwater pollutants.

Advantages

- Reduces or eliminates the cost of constructing storm sewers or other conveyances, and may reduce the need for land disturbance and grading.
- Increases travel times and lower peak discharges.
- Can be combined with buffer systems to enhance stormwater filtration and infiltration.

Use

a) Use vegetated open channels in the street right-of-way to convey and treat stormwater runoff from roadways, particularly for low-density development and residential subdivisions where density, topography, soils, slope, and safety issues permit.
b) Use vegetated open channels in place of curb and gutter to convey and treat stormwater runoff.
c) Design drainage systems and open channels to:
    i. Increase surface roughness to retard velocity.
    ii. Include wide and flat channels to reduce velocity of flow and encourage sheet flow if possible.
    iii. Increase channel flow path to increase time of concentration and travel time.

Standards

Chapter 11 of the *Connecticut Stormwater Quality Manual* includes specific design standards and considerations for grass drainage channels, which should be followed when implementing these BMPs.

## 5.4.3 Green Roofs and Facades

*Figure 5.22* – Aetna Building, Hartford, CT. Source: Connecticut Department of Energy and Environmental Protection.

Rooftop runoff management structures are modifications to conventional building design that attenuate runoff originating from roofs. The modifications include:

- Vegetated roof covers
- Roof gardens
- Vegetated building facades

- Roof ponding areas (e.g., blue roofs)

Roofs are significant sources of runoff from developed sites. If runoff is controlled at the source, the size of other BMPs throughout the site can be reduced. Rooftop runoff management practices influence the runoff hydrograph in two ways:

- Intercept rainfall during the early part of a storm.
- Limit the maximum release rate.

In addition to achieving specific stormwater runoff management objectives, rooftop runoff management can also be aesthetically and socially beneficial.

Advantages

- Rooftop runoff management techniques can be retrofitted to most conventionally constructed buildings.
- Reduces energy consumption for heating and cooling.
- Conserves space.
- Reduces wear on roofs caused by UV damage, wind, and extremes of temperature. Vegetative roof covers can reduce bare roof temperatures in summer by as much as 40 percent.
- Roof gardens, vegetated roof covers, and vegetated facades add aesthetic value to residential and commercial property that attract songbirds, bees, and butterflies.
- Benefit water quality by reducing the acidity of runoff and trapping airborne particulates.
- May reduce the size of onsite runoff attenuation BMPs.

Use

a) Use vegetative roofs on residential, commercial and light industrial buildings.
b) Vegetative roof systems are most appropriate on roofs with slopes of 12:1 to 4:1.
c) Vegetative roofs may be used on flatter slopes if an underdrain is installed.

Design Variations

- Vegetated roof cover – Vegetated roof covers, also called green roofs and extensive roof gardens, involve blanketing roofs with a veneer of living vegetation. Vegetative roof covers are particularly effective when applied to extensive roofs, such as those that typify commercial and institutional buildings. The filtering effect of vegetated roof covers results in a roof discharge that is free of leaves and roof litter. Therefore, it is recommended where roof runoff will be directed to infiltration devices (see Standards for Infiltration Practices and Dry Wells.)

  Because of recent advances in synthetic drainage materials, vegetated covers now are feasible on most conventional flat roofs. An efficient drainage layer is placed between the growth media and the roof surface. This layer rapidly conveys water off of the roof surface and prevents water from "lying" on the roof. In fact, vegetated roof covers can be expected to protect roof materials and prolong their life.

  If materials are selected carefully to reduce the weight of the system, vegetated roof covers generally can be created on existing flat roofs without additional structural support. Drainage nets or sheet drains constructed from lightweight synthetic materials can be used as underlayments to carry away water and prevent ponding. The total load of a fully vegetated and

saturated roof cover system can be less than the design load computed for gravel ballast on conventional tar roofs.

Although vegetative roof covers are most effective during the growing season, they also are beneficial during the winter months as additional insulation if the vegetative matter from the dead or dormant plants is left in place and intact.

- Roof Gardens – Vegetated roof covers blanket an entire roof area and, although presenting an attractive vista, generally are not intended to accommodate routine traffic by people. Roof gardens, on the other hand, are landscaped environments, which may include planters and potted shrubs and trees. Roof gardens can be tailor-made natural areas, designed for outdoor recreation, and perched above congested city streets. Because of the special requirements for access, structural support, and drainage, roof gardens are found most frequently in new construction.

  Roof gardens generally are designed to achieve specific architectural objectives. The load and hydraulic requirements for roof gardens will vary according to the intended use of the space. Intensive roof gardens typically include design elements such as planters filled with topsoil, decorative gravel or stone, and containers for trees and shrubs. Complete designs also may detain runoff ponding in the form of water gardens or storage in gravel beds. A wide range of hydrologic principles may be exploited to achieve stormwater management objectives, including runoff peak attenuation and runoff volume control.

- Vegetated Building Facades – Vegetated facades provide many of the same benefits as vegetated roof covers and roof gardens, including the interception of precipitation and the retardation of runoff. However, their effectiveness is limited to small rainfall events.

  Vertical facades and walls of houses can be covered with the foliage of self-climbing plants that are rooted in the ground and reach heights in excess of 80 feet. Vines can be evergreen or prolific deciduous flowering plants. As for roof gardens, the designer must be judicial in selecting plant species that will prosper in the constructed environment. Planters and trellises can be installed so that vegetation can be placed strategically.

- Roof Ponding – Roof ponding, also known as blue roofs, is applicable where the increased load of impounded water on a roof will not increase the building costs significantly or require extensive reinforcement. Roof ponding generally is not viable for large-area commercial buildings where clear spans are required. Special consideration must be given to ensuring that the roof will remain watertight under a range of adverse weather conditions. Low-cost plastic membranes can be used to construct an impermeable lining for the containment area.

Flat roofs can be converted to ponding areas by restricting the flow to downspouts. Even small ponding depths of 1 or 2 inches can attenuate stormwater runoff peak flows effectively for most storms.

### Design Considerations

Rooftop measures are primarily peak runoff attenuation measures. The methods for evaluating the peak attenuation properties of these measures are based on approaches used for other peak runoff attenuation BMPs. The emphasis of the design should be promoting rapid roof drainage and minimizing the weight

of the system. By using appropriate materials, the total weight of fully saturated vegetated roof covers can readily be maintained below 20 pounds per square foot (psf). Because of the many factors that may influence the design of vegetated roof covers, it is advisable to obtain the services of installers that specialize in this area.

Rainfall retention properties are related to field capacity and wilting point. Appropriate media for this application should be capable of retaining water at the rate of 40 percent by weight, or greater. The media must be uniformly screened and blended to achieve its rainfall retention potential. During the early phases of a storm, the media and root systems of the cover will intercept and retain most of the rainfall, up to the retention capacity. For instance, 3-inch cover with 40 percent retention potential will effectively control the first 1.2 inches of rainfall. Although some water will percolate through the cover during this period, this quantity generally will be negligible, compared to the direct runoff rate without the cover in place.

Once the field capacity of the cover is attained, water will drain freely through the media at a rate that is approximately equal to the saturated hydraulic conductivity for the media. Through the selection of the media, the maximum release rate from the roof can be controlled. The media is a mechanism for "buffering" or attenuating the peak runoff rates from roofed areas. Rooftop runoff management measures generally are more effective in controlling storms that generate 1 inch or less of runoff (i.e., 1.2-inch storm). However, because storms of this size constitute the majority of rainfall events, rooftop runoff measures can be important in planning for comprehensive stormwater management. These measures are particularly useful when linked to groundwater recharge BMPs such as infiltration trenches, dry wells, and permeable pavements. By retaining rainfall for evaporation or plant transpiration, some rooftop runoff management measures, such as vegetated roof covers, can also achieve significant reductions in total annual runoff. This attenuation of runoff peaks from larger storms should be taken into account when sizing related runoff peak attenuation at the site.

By using specific information about the hydraulic properties of the cover media, the effect of the roof cover system on the runoff hydrograph can be approximated with numerical modeling techniques. As appropriate, the predicted hydrographs can be added into site-wide runoff models to evaluate the effect of the vegetative roof covers on site runoff. The hydraulic analysis of roof covers will require the services of a professional engineer who is experienced with drainage design.

*Impermeable Lining*

a) In some instances, the impermeable lining can be the watertight tar surface, which is conventional for flat roof construction. However, where added protection is desired, a layer of plastic or rubber membrane can be installed immediately beneath the drainage net or sheet drain. This liner needs to be designed by a professional engineer to ensure proper function.
b) If membranes are used, their resistance to ultraviolet (UV) radiation, extremes of temperature, and puncture must be known. In most cases, covering the sealing material with a protective layer of gravel or geotextile is advisable.

*Drainage*

a) The drainage net or sheet drain is a continuous layer that underlies the entire cover system. A variety of lightweight, high-performance drainage products will function well in this environment. The product selected should be capable of conveying the discharge associated with the runoff peak attenuation storm without ponding water on top of the roof cover. When evaluating a drainage layer design, the roof topography should be evaluated to establish where the longest travel distances to a roof gutter, drain, or downspout occur. If flow converges near drains and gutters, the design unit-flow rate should be increased accordingly.
b) Drainage nets or sheet drains with transmissivities of 15 gallons per minute per foot, or larger, are recommended.
c) The drainage layer should be able to convey the design unit flow rate at the roof grade without water ponding on top of the cover media. For larger storms, direct roof runoff is permitted to occur. The design flow rates should be based on the largest runoff peak attenuation design storm considered in the design.
d) To prevent the growth media from penetrating and clogging the drainage layer and to prevent roots from penetrating the roof surface, a geotextile should be installed immediately over the drainage net or sheet drain. Many vendors will bond the geotextile to the upper surface of the drainage material.
e) Effective roof garden designs will ensure that all direct rainfall is cycled through one or more devices before being discharged to downspouts as runoff. For instance, rainfall collected on a raised tile patio can be directed to a media-filled planter where some water is retained in the root zone and some is detained and gradually discharged through an overflow to the downspout.
f) In the case of roof ponding, devices such as the one shown in *Figure 5.23*, are easily fabricated. However, some form of emergency overflow also is advisable. Emergency overflow can be as simple as a free overfall through a notch in the roof parapet wall.
g) In roof ponding systems, because the roof is impermeable, the runoff hydrograph is simply the rainfall distribution for the design storm multiplied by the area of the roof.

The depth to storage relationship can be computed from the topography of the roof. For perfectly flat roofs, the storage volume of a ponding level is equal to the roof area times the ponding level. The depth-discharge relationship in will be unique to the outlet device used. For simple ponding rings on flat roofs, the discharge rate will approximately equal:

$$q = 3.141\ CD\ (d - H)^{3/2}$$

Where:

q = outflow rate
C = discharge coefficient (Varies based on design) Typical: C = 3.0
D = diameter of the ring
d = depth of ponding
H = height of the ring

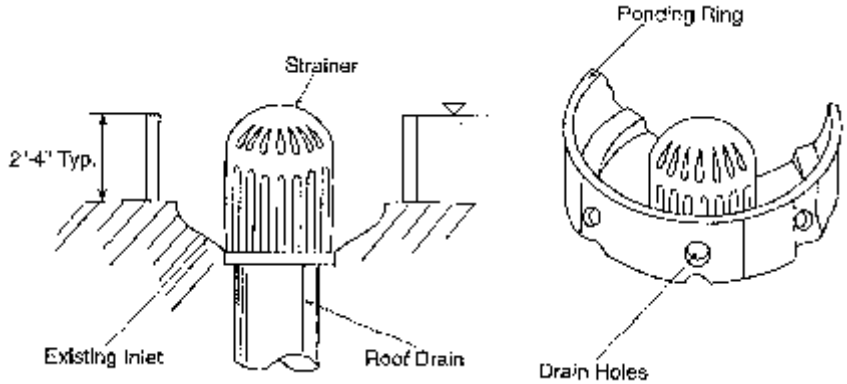


*Figure 5.23* – Roof ponding rings. Source: Tourbier, 1974.

H = height of the ring

### *Roof Loading*

The net weight of the fully vegetated roof cover should be compared against the design loads for the roof.

### *Lightweight Growth Media*

a) The depth of the growth media should be kept as small as the cover vegetation will allow. Typically, a depth of 3 to 4 inches will be sufficient. Low-density substrate materials with good water-retention capacity should be specified. Examples are mixtures containing crushed pumice and terra cotta. Media that are appropriate for this application will retain 40 to 60 percent water by weight and have bulk dry densities of between 35 and 50 lb/cubic foot. Earth and topsoil are too heavy for most applications.
b) Hydrologic properties are specific to the growth medium. If the supplier does not provide information, prospective media should be laboratory tested to establish porosity, moisture content at field capacity, moisture content at the wilting point (nominally 0.33 bar), and saturated hydraulic conductivity.

### *Adapted Plants and Grasses*

a) A limited number of plants can thrive in the roof environment where periodic rainfall alternates with periods that are hot and dry. Effective plant species must:

    i. Tolerate mildly acidic conditions and poor soil;
    ii. Prefer very-well-drained conditions and full sun;
    iii. Tolerate dry soil;
    iv. Be vigorous colonizers.

Both annual and perennial plants can be used. Dozens of species have been successfully field-tested. Among these, some species of sedum (Sedum) have been shown to be particularly well adapted. Other candidates include hardy species of sedge (Carex), fescue (Festuca), feather grass (Stipa), and yarrow (Achillea).

b) Vegetative roof covers may include provisions for occasional watering during extended dry periods. Conventional lawn sprinklers work well.

c) The key to developing an effective vegetated facade is selecting plants that are well adapted to the conditions in which they must grow. For instance, depending on the location, plants may encounter shade or full sun. Plants that will provide thick foliage should be selected. Some plants with good climbing and foliage characteristics are ivy (Hedera), honeysuckle (Loniciera), wisteria (Wisteria), Virginia creeper (Part henocissus), trumpet creeper (Campsis), and hardy cultivars of clematis (e.g., Cleinatis paniculata). Some of these plants will require a trellis or lattice to firmly support the vines.

*Inspection and Maintenance*

a) Plans for water quality swales should identify detailed inspection and maintenance requirements, inspection and maintenance schedules, and those parties responsible for maintenance.

b) All rooftop runoff management measures must be inspected and maintained periodically. Furthermore, the vegetative measures require the same normal care and maintenance that a planted area does. The maintenance includes attending to plant nutritional needs, irrigating as required during dry periods, and occasionally weeding.

c) The cost of maintenance can be significantly reduced by judiciously selecting hardy plants that will outcompete weeds.

d) In general, fertilizers must be applied periodically. Fertilizing usually is not a problem on flat or gently sloping roofs where access is unimpeded and fertilizers can be uniformly broadcast.

e) Properly designed vegetated roof covers should not be damaged by treading on the cover system.

f) When retrofitting existing roofs, preserve easy access to gutters, drains, spouts, and other components of the roof drainage system.

g) It is good practice to thoroughly inspect the roof drainage system quarterly. Foreign matter, including leaves and litter, should be removed.

Table 5.6
Typical Maintenance Activities for Rooftop Runoff Structures

| Activity | Schedule |
|---|---|
| • Inspect to ensure vegetative cover is established<br>• Remove foreign matter, leaves, and litter | Quarterly |
| • Irrigate/Water<br>• Weed | As necessary |
| • Apply fertilizers to flat or gently sloped roofs | As necessary |
| • Repair erosion on side slopes with seed or sod | As necessary |

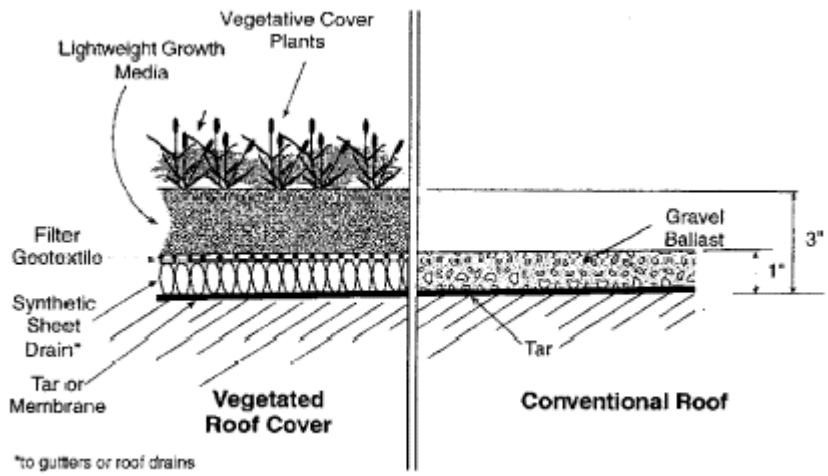


*Figure 5.24* – Example Vegetated Rooftop Cross-Section

## 5.4.4 Rainwater Harvesting

Rain barrels and cisterns are rainwater collection and storage devices (see *Figure 5.25*). They are generally low-cost and easily maintainable. They are applicable, for purposes of retrofit, to residential, commercial and industrial sites to manage rooftop runoff. Rain barrels and cisterns are not generally given stormwater management credit on new development.

Cisterns are generally larger than rain barrels, with some underground cisterns having the capacity of 10,000 gallons or more. Water collected in cisterns is typically used for irrigation or in some instances as a potable supply.

Advantages

- Low cost.
- Applicable to a wide range of sites (e.g., residential, commercial industrial, etc.).
- Provide retention and detention of runoff from roofs.
- Can provide reuse of water for landscape irrigation.

*Figure 5.25* – Example of a rain barrel. Source: Connecticut Department of Energy and Environmental Protection.

Use

a) Use rain barrels and cisterns in commercial, industrial and domestic settings.
b) Incorporate rain barrels and cisterns when a building is being designed so that they can be blended into the landscape. They can also be retrofitted.
c) Size rain barrels and cisterns based on roof area. The required capacity of a rain barrel is a function of the rooftop surface evaporative water losses and initial abstraction.

Rain barrel volume can be determined by calculating the roof top water yield for any given rainfall, using Equation 10. A general rule of thumb to utilize in the sizing of rain barrels is that 1 inch of rainfall on a 1000-square-foot roof will yield approximately 600 gallons.

$$V = A^2 \times R \times 0.90 \times 7.5 \; gals/ft^3$$

where:

$V$ = volume of rain barrel (gallons)
$A^2$ = surface area roof (square feet)
$R$ = rainfall (feet)
0.9 = losses to system (no units)
7.5 = conversion factor (gallons per cubic foot)

Example: one 60-gallon barrel would provide runoff storage from a rooftop area of approximately 215 square feet for a 0.5 inch (0.042 ft.) of rainfall.

$$60 \; gallons = 215 \; ft.^2 \times 0.042 \; ft. \times 0.90 \times 7.5 \; gallons/ft.^3$$

d) If collected water will be used as a drinking source, the system will generally require local authority review and approval.
e) Assure long-term function by establishing maintenance agreements.

Standards

Chapter 4 of the *Connecticut Stormwater Quality Manual* includes specific design standards and considerations for rain barrels and cisterns, which should be followed when implementing these BMPs.

## 5.4.5 Dry Wells

A dry well is a small, excavated pit, backfilled with stone aggregate. Dry wells function like infiltration systems to control roof runoff and are applicable for most types of buildings (see *Figure 5.26*).

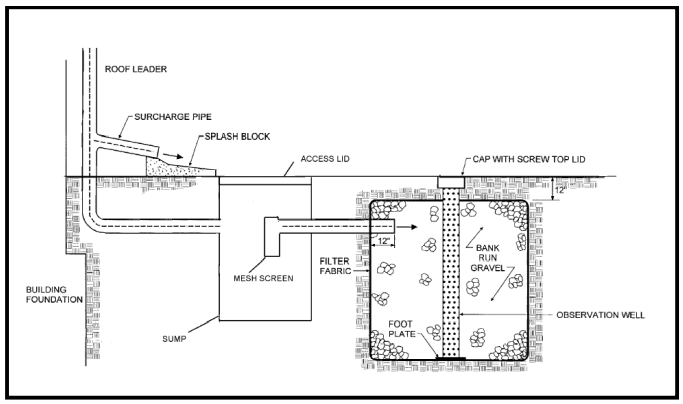


*Figure 5.26* – Schematic of a drywell with optional sump to facilitate cleanout. Source:

Advantages

- Low cost.
- Applicable to a wide range of sites (e.g., residential, commercial industrial, etc.).
- Provides retention of runoff from roofs.
- Recharges groundwater.
- Reduces need for end-of-pipe treatment.

Use

a) Dry wells can be useful for disposing of roof runoff and reducing the overall runoff volume from a variety of building sites.
b) Infiltration of rooftop runoff from commercial or industrial buildings with pollution control, heating, cooling, or venting equipment may require UIC review and approval.

Standards

Chapter 4 and 11 of the *Connecticut Stormwater Quality Manual* include specific design standards and considerations for dry wells, which should be followed when implementing these BMPs.

## 5.4.6 Bioretention, Rain Gardens and Tree Box Filters

*Figure 5.27* – Bioretention at University of Connecticut Storrs Campus, Mansfield. Source: Connecticut Department of Energy and Environmental Protection.

Bioretention and rain gardens are shallow landscaped depressions designed to manage and treat stormwater runoff. Bioretention systems are a variation of a surface sand filter, where the sand filtration media is replaced with a planted soil bed designed to remove pollutants through physical and biological processes (EPA, 2002). The concept of bioretention originated with the Prince George's County, Maryland, Department of Environmental Resources in the early 1990s as an alternative to more traditional management practices. Stormwater flows into the bioretention area, ponds on the surface, and gradually infiltrates into the soil bed. Treated water is allowed to infiltrate into the surrounding soils or is collected by an underdrain system and discharged to the storm drain system or receiving waters. Small-scale bioretention applications (i.e., residential yards, median strips, parking lot islands) are commonly referred to as rain gardens (*Figure 5.28*). Tree box filters (*Figure 5.29*) are essentially mini bioretention systems installed in concrete vaults. They are most often designed to fit in urban landscapes (e.g., sidewalks as part of street tree systems) where space is at a premium.

Advantages

- Applicable to small drainage areas, stormwater retrofits and highly developed sites.
- Can be applied to most sites due to relatively few constraints and many design variations (i.e., highly versatile).
- High solids, metals, and bacteria removal efficiency.
- Infiltrating bioretention can provide groundwater recharge.
- Helps to mimic predevelopment runoff conditions.
- Reduces need for end-of-pipe treatment.

*Figure 5.28* – Rain garden. Source: Connecticut Department of Energy and Environmental Protection.

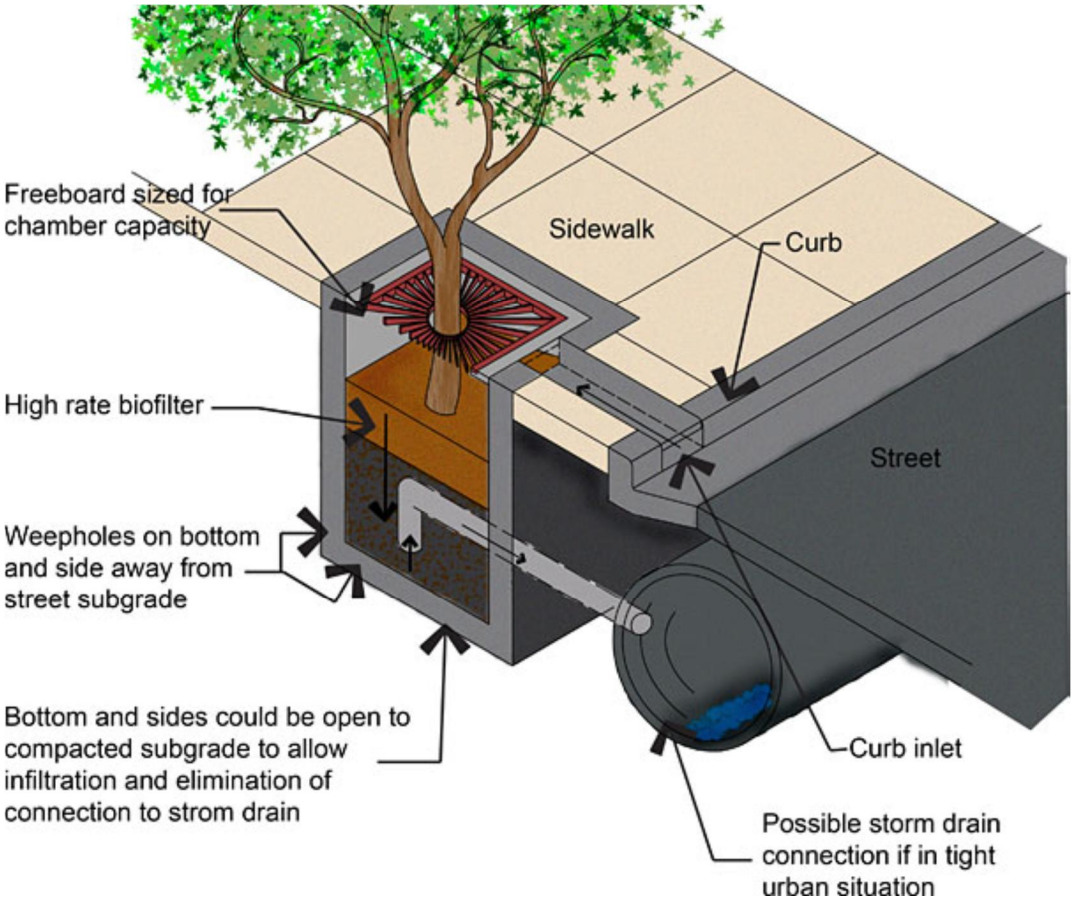


*Figure 5.29* – Diagram of a tree box filter. Source: http://www.nashuarpc.org/publications/environmental/LID_guidebook.pdf

Use

a) Bioretention may be used in a wide variety of settings including residential, commercial, and industrial areas.
b) May be decentralized (e.g., as rain gardens on individual lots) or centralized in common areas to manage multiple properties.
c) May be lined and underdrained; or designed to infiltrate and recharge groundwater.

*Figure 5.30* – Photograph of a tree box filter.

Standards

Chapter 4 and 11 of the *Connecticut Stormwater Quality Manual* include specific design standards and considerations for bioretention, which should be followed when implementing these BMPs.

Tree box filters should use the same soil media as standard bioretention systems. Like bioretention the reservoir at the top of a tree box filter should be sized to manage the water quality volume and should include a bypass drain for large storm events. The vault may be either closed or open-drained at the bottom depending on the underlying soils and depth to groundwater. Vegetation species used in the tree box filter should be both drought and salt-tolerant with root systems that are not terribly aggressive.

### 5.4.7 Infiltration Trenches

An infiltration trench is an excavated trench that has been back-filled with stone to form a subsurface basin. Stormwater runoff is diverted into the trench and is stored until it can be infiltrated into the soil, unusually over a period of 1 – 2 days.

*Figure 5.31* – Photograph of an infiltration trench.

Advantages

- Applicable to small drainage areas, stormwater retrofits and highly developed sites.
- High bacteria removal efficiency.
- Infiltration provides groundwater recharge.
- Helps to mimic predevelopment runoff conditions.
- Reduces need for end-of-pipe treatment.

Use

a) Infiltration may be useful for disposing of roof runoff (e.g., dry wells), or runoff from parking lots and roadways.
b) Infiltration trenches generally have a longer life cycle when hydrologically proceeded by pretreatment such as a vegetated filter strip.
c) Infiltration generally requires UIC review and approval.

Standards

Chapter 11 of the *Connecticut Stormwater Quality Manual* includes specific design standards and considerations for infiltration, which should be followed when implementing infiltration BMPs.

## 5.4.8 Subsurface Gravel Wetlands

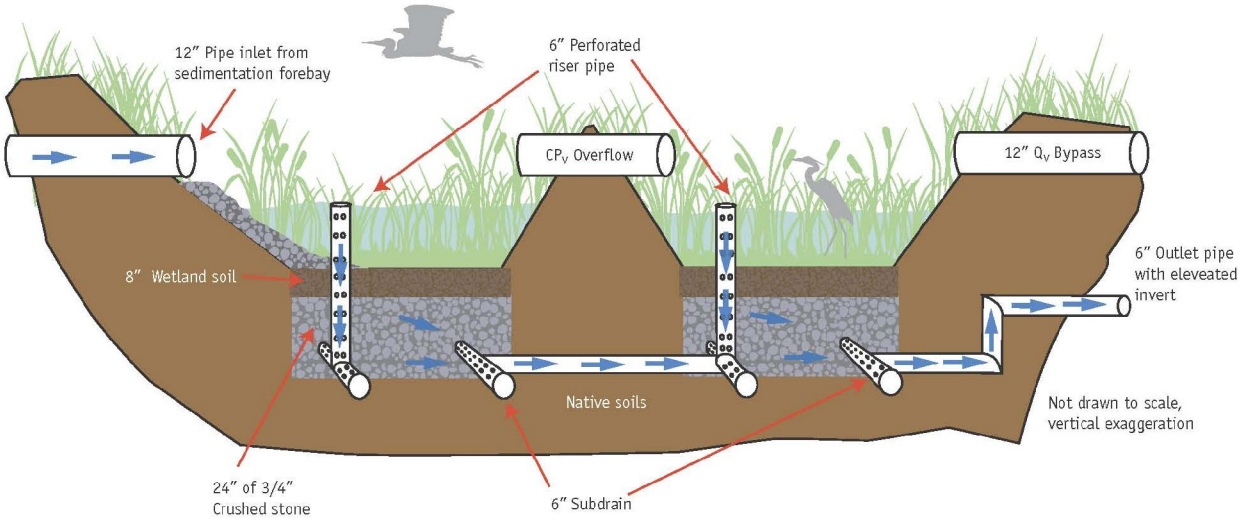


*Figure 5.32* – Schematic of subsurface gravel wetlands. Source: UNHSC

A subsurface gravel wetland (SGW) is a wet stormwater basin system designed to provide treatment primarily in a wet gravel bed with emergent vegetation. The SGW is designed as a series of horizontal flow-through treatment cells, preceded by a sedimentation basin (forebay) (*Figure 5.32*).

### Advantages

- Applicable to small drainage areas, stormwater retrofits and highly developed sites.
- High bacteria removal and nutrient removal efficiency.
- Reduces need for end-of-pipe treatment.
- Well-suited for water quality retrofit of existing storm drainage systems and stormwater ponds.

### Uses

a) Subsurface gravel wetlands may be used in a wide variety of settings including residential, commercial, and industrial areas; but are most commonly applied to commercial and industrial settings.
b) May be decentralized (e.g., bioretention) or centralized in common areas to manage multiple properties.
c) Must be lined and underdrained to ensure proper function.

### Design Considerations

SGWs are designed to retain and filter the entire WQV using a forebay and two treatment cells. The two treatment cells are gravel reservoirs that act as permanent pools. These saturated gravel reservoirs support anaerobic microbial cultures, which provide water quality treatment of pathogens, nutrients, and other constituents. Water retained in the gravel reservoir is displaced by subsequent runoff events and thus receives flow-through filtering prior to being discharged.

Gravel wetlands may be constructed on-line or off-line. On-line systems receive upstream runoff from all storms, providing runoff treatment for the stormwater quality design storm and conveying the runoff from larger storms through an outlet or overflow. Multi-purpose on-line systems also store and

attenuate these larger storms to provide runoff quantity control. In off-line gravel wetlands, the runoff from storms larger than the stormwater quality design storm bypasses the basin through an upstream diversion device. This not only reduces the size of the required basin storage volume, but reduces the basin's long-term pollutant loading and associated maintenance. In selecting an off-line design, the potential effects on wetland vegetation and ecology of diverting higher volume runoff events should be considered.

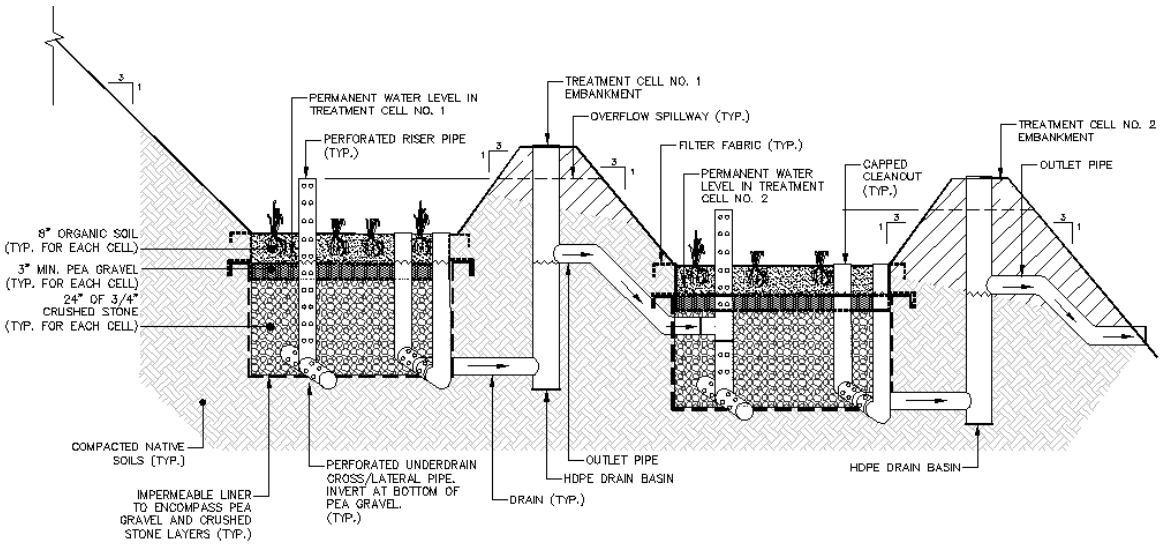


*Figure 5.33* – Typical design of subsurface gravel wetlands.

### *Forebays*

a. Forebays should be designed in accordance with the *Connecticut Stormwater Quality Manual* standards for constructed wetlands. Manufactured pretreatment systems may be used in lieu of forebays provided that they meet the *Connecticut Stormwater Quality Manual* standards.

### *General Treatment Cell Design*

a. Subsurface gravel wetlands should generally include two treatment cells. Each treatment cell should include a volumetric capacity of 50% of the WQV and together should provide for 100% volumetric capacity of the WQV.
b. All surface basin (and forebay) side slopes are 3:1 or flatter for maintenance.
c. Gravel length to width ratio of 0.5. At a minimum, cells should be configured to create a 15-foot flow path across each treatment cell. The flow once again passes through 15 feet of anaerobic gravel before discharging. The two cell system allows for storm events equal or less than the water quality storm to pass through 30 feet of gravel.
d. Berms and weirs separating the forebay and treatment cells should be constructed with clay, or non-conductive soils, and/or a fine geotextile, or some combination thereof, to avoid water seepage and soil piping through these earthen dividers.

### *Treatment Cell Wetlands Layers*

a. A minimum soil depth of eight inches must be provided for the vegetation. The soil mix must provide sufficient growing media and have low permeability rates since the flow into the gravel media must pass through the pipe and not through the wetlands soil.

b. The surface infiltration rates of the gravel wetland soil should be similar to a low hydraulic conductivity wetland soil (0.1-0.01 ft/day = 3.5 x 10-5 cm/sec to 3.5 x 10-6 cm/sec)). The wetlands soils must have low hydraulic conductivity to support continuously wet conditions in the treatment cells. Soils should be mixed using a combination of compost, sand, silt, and clay, with the clay component not exceeding 15% by volume. The soil should be a silt loam with 10% to 20% organic content by mass. The organic matter should consist of leaf compost or peat. Leaf compost should be properly matured and at least one year old. The leaf compost should be made exclusively of fallen deciduous leaves with less than 5% dry weight of woody or green yard debris or other materials. The compost should be generally free of trash and other debris. Leaf mulch, composted mixed yard debris, wood chips, biosolids, mushroom compost or composted animal manures are not acceptable sources of organic matter.

c. A three inch pea gravel layer is required between the wetland soil and the subsurface gravel cells. The transition between the planting bed and the crushed stone may be also composed of a combination of sand and washed pea gravel. This transition layer is necessary to prevent the finer portion of the wetland soil from migrating down into the gravel cells. The transition area must be designed to ensure that the wetland soil does not migrate to the gravel cell below. Pea gravel/sand must be used instead of filter fabric because the fine components of the wetland soil may clog the filter fabric and restrict root growth. The portion of the pipes that pass through the wetlands planting media and through the berm between the cells must be solid as shown above.

Table 5.7
Design Criteria for Gravel Wetlands

| Wetland Design Feature | Size |
|---|---|
| Minimum wetland soil depth | 8 inches |
| Minimum pea gravel depth | 3 inches |
| Minimum crushed stone depth | 24 inches |
| Minimum distance flow length in gravel substrate cell | 15 ft (for each cell) |
| Drain time of wetlands cells | 30 to 48 hours |
| Forebay Volume | 10% of WQV |
| Temporary Wetlands Volume (Per Cell) | 50% of WQV |
| Distance of outlet invert above bottom of wetland soil | 4 inches |

*Submerged Gravel Beds*

a. The gravel cells must be a minimum of 24 inches deep filled with ¾-inch crushed stone. It is essential that the gravel cells remain submerged in order for denitrification to occur.

b. The bottom of the gravel wetlands does not require a separation from the seasonal high groundwater table; however, the bottom of the gravel bed must be enclosed with a liner or other impervious material to ensure that the gravel bed remains saturated, and to prevent the migration of the stormwater into the adjacent groundwater table. The elevation of the outlet pipe and box, including bedding materials must be at or above the seasonal high groundwater table or lined.

*Subdrains and Outlets*

a. The SGW must be design to drain the water quality design storm between 24 to 48 hours. The drain time is controlled by an orifice at the outlet structure, placed four inches above the bottom of the wetland soil bed. If designs include flow through the subsurface gravel significantly greater than 30 feet, additional analysis should be performed to determine whether the orifice or the losses through the subsurface gravel system controls the drain time. In addition, the riser pipes or underdrains must be sized with sufficient capacity that that they do not control the drain time of the system.

b. The outlet structure must have an adjustable outlet to allow vegetation to initially establish. Once the vegetation is established, the outlet structure must maintain the water elevation at four (4) inches above the bottom of the wetlands soil.

c. Subsurface gravel wetlands should be equipped with a bottom drain pipe valve at an elevation a minimum of three (3) inches above the bottom of the gravel bed for maintenance. Maintenance plans must clearly indicate that all valves for maintenance are to remain closed except as necessary for specific maintenance activities, such as the temporary draindown or backflush of the subsurface wetlands cell if necessary. Such drains must be controlled by a lockable valve that is readily accessible from the outlet structure.

d. Care should be taken to not design a siphon that would drain the wetland: the primary outlet location must be open or vented.

*Overflow Bypass*

a. Subsurface gravel wetlands must be able to convey peak flows greater than the WQV to downstream drainage systems in a safe and stable manner. SGWs classified as dams by CTDEEP must also meet the overflow requirements of these Standards.

b. Vertical perforated or slotted riser pipes deliver water from the surface down to the subsurface, perforated or slotted distribution lines. These risers shall have a maximum spacing of 15 feet (4.6 m) (Figure 1). Oversizing of the perforated or slotted vertical risers is useful to allow a margin of safety against clogging with a minimum recommended diameter of 12" (30 cm) for the central riser and 6" (15 cm) for end risers. The vertical risers shall not be capped, but rather covered with an inlet grate to allow for an overflow when the water level exceeds the WQV.

c. Vertical cleanouts connected to the distribution and collection subdrains, at each end, shall be perforated or slotted only within the gravel layer, and solid within the wetland soil and storage area above. This is important to prevent short-circuiting and soil piping.

*Tailwater*

a. The design of all hydraulic outlets must consider any significant tailwater effects of downstream waterways or facilities. This includes instances where the lowest invert in the outlet or overflow structure is below the flood hazard area design flood elevation of a receiving stream.

## Maintenance

Effective subsurface gravel wetland performance requires regular and effective maintenance. Maintenance requirements for gravel wetlands are presented below. These requirements must be included in the maintenance plan.

*General Maintenance*

a. All subsurface gravel wetland components expected to receive and/or trap debris and sediment must be inspected for clogging and excessive debris and sediment accumulation at least twice annually and as needed. The forebay must be cleaned when it accumulates to either six (6) inches or 10% of the forebay volume or if it remains wet nine hours after the end of a storm event.

b. The subsurface gravel wetland system has many components that allow portions of the system to drain for maintenance purposes or for the initial establishment of vegetation. The standard status of these valves or other controls must be clearly indicated in the maintenance plan to ensure that the hydraulics function as designed.

c. Disposal of debris, trash, sediment, and other waste material must be done at suitable disposal/recycling sites and in compliance with all applicable local, state, and federal waste regulations.

*Vegetated Areas*

a. The wetlands vegetation must be harvested at least once every three years and no more frequently than once a year.

b. When establishing or restoring vegetation, biweekly inspections of vegetation health should be performed during the first growing season or until the vegetation is established. Once established, inspections of vegetation health, density, and diversity should be performed at least twice annually during both the growing and non-growing seasons. The vegetative cover must be maintained at 85 percent. If vegetation has greater than 50 percent damage, the area must be reestablished in accordance with the original specifications and the inspection requirements presented above.

c. The types and distribution of the dominant plants must also be assessed during the semi-annual wetland inspections described above. This assessment should be based on the health and relative extent of both the original species remaining and all volunteer species that have subsequently grown in the wetland. Appropriate steps must be taken to achieve and maintain an acceptable balance of original and volunteer species in accordance with the intent of the wetland's original design.

d. All use of fertilizers, mechanical treatments, pesticides and other means to assure optimum vegetation health should not compromise the intended purpose of the subsurface gravel wetland. All vegetation deficiencies should be addressed without the use of fertilizers and pesticides whenever possible.

*Structural Components*

a. All structural components must be inspected for cracking, subsidence, spalling, erosion, and deterioration at least annually.

*Other Maintenance Criteria*

a. The system must take between 24 hours and 72 hour to drain. If the drain time is significant longer than 72 hours or shorter than 24 hours for a storm event of one-inch or more, the wetland's outlet structure, perforated pipe performance, forebay, valves, and other components that may provide hydraulic controls must be evaluated and appropriate measures taken to comply with the minimum and maximum drain time requirements and maintain the proper functioning of the subsurface gravel wetland. All the components that must be checked in such cases must be listed in the maintenance plan for the system.

# 6 References

Atlantic Regional Commission (ARC). 2001. *Georgia Stormwater Management Manual*. [No municipality of publication].

Bobrowski, Mark and Teitz, Andrew. 2001. *Model Land Use Ordinances.* Providence, RI.

Burton, G.A., & R.E. Pitt, 2002. *Stormwater Effects Handbook. A Toolbox for Watershed Managers, Scientists, and Engineers*. Lewis Publishers. New York, NY.

Center for Watershed Protection (CWP). 2000. *The Practice of Watershed Protection.* Ellicott City, Maryland.

Center for Watershed Protection (CWP). 1996. *Review Draft: Pollutant Removal Database of Current Urban Stormwater Best Management Practices.* Silver Spring, Maryland.

Center for Watershed Protection (CWP). [no publication date]. *Better Site Design: An Assessment of the Better Site Design Principles for Communities Implementing Virginia's Chesapeake Bay Preservation Act.* Ellicott City, Maryland.

Center for Watershed Protection (CWP). 2000. *Better Site Design: A Handbook for Changing Development Rules in Your Community.* Ellicott City, Maryland.

Center for Watershed Protection (CWP). 2002. *Vermont Stormwater Management Manual. Vermont Agency of Natural Resources.* Waterbury, VT.

Center for Watershed Protection (CWP). [no publication date]. Better Site Design Fact Sheet: Narrower Residential Streets. http://www.stormwatercenter.net/Assorted%20Fact%20Sheets/Tool4_Site_Design/narrow_streets.htm

Connecticut Department of Environmental Protection (DEP). 1995. *Connecticut Stormwater Quality Manual (draft).* Bureau of Water Management. Planning and Standards Division. Hartford, Connecticut.

Connecticut Department of Environmental Protection (DEP). 1995. *Connecticut Stormwater Quality Planning: A Guide for Municipal Officials and Regional Planners (draft).* Bureau of Water Management. Planning and Standards Division. Hartford, Connecticut.

Cyre, Hector J. (1982). *"Stormwater Management Financing." Houston: American Public Works Association.*

Cyre, Hector J. (1983). "New Options for Stormwater Financing." *APWA Reporter*. Houston: American Public Works Association.

Frisman, Paul. (2004). *"Storm Water Utilities." Hartford: Office of Legal Research*.
Malcolm Pirnie. (Interim Draft 2009). *Stormwater Pilot Program Interim Report*. White Planes: Author.

Gibbons, Jim. 1999. Nonpoint Source Education for Municipal Officials: Roads. http://www.nemo.uconn.edu/publications/tech_papers/tech_paper_9.pdf

Horsley and Whitten. [No publication date]. *Urban Stormwater Planning Handbook: A Survey of Innovative Structural Stormwater Best Management Practices.* [No municipality of publication].

Institute of Transportation Engineers (ITE). 1987. Parking Generation. 2nd Edition. Institute of Transportation Engineers, Washington, DC. 220 pp.

Metropolitan Council. 2001. *Minnesota Urban Small Sites BMP Manual: Stormwater Best Management Practices for Cold Climates.* Prepared by Barr Engineering Company. St. Paul, Minnesota.

Metropolitan Council Environmental Services. 2003. *Urban Small Sites Best Management Practice Manual. h*ttp://www.metrocouncil.org/environment/Watershed/bmp/manual.htm

Milone & MacBroom, Inc. (2005). *Stormwater Utility Feasibility Study, Stonington, Connecticut*. Cheschire: Author.

Milwaukee River Basin Partnership. [no publication date]. Protecting Our Waters: Streets and Roads. http://clean-water.uwex.edu/plan/streetsroads.htm

*Municipal Stormwater Authority Pilot Program, Public Act 7-154 (2007).*

Nashua Regional Planning Commission (NRPC). [no publication date]. *Low Impact Development Guidebook*. http://www.nashuarpc.org/publications/environmental/LID_guidebook.pdf.

Natural Resources Defense Council (NRDC). 1999. *Stormwater Strategies: Community Responses to Runoff Pollution*.

New Jersey Department of Environmental Protection (NJDEP). 2000. *Revised Manual for New Jersey: Best Management Practices for Control of Nonpoint Source Pollution from Stormwater,* Fifth Draft, May 3, 2000.

New York State Department of Environmental Conservation (NYDEC). 2001. *New York State Stormwater Management Design Manual.* Prepared by Center for Watershed Protection. Albany, New York.

Nonpoint Education for Municipal Officials (NEMO) website, URL: http://nemo.uconn.edu.

Pennsylvania Association of Conservation Districts, Keystone Chapter Soil and Water Conservation Society, Pennsylvania Department of Environmental Protection, and Natural Resources Conservation Service. 1998. *Pennsylvania Handbook of Best Management Practices for Developing Areas.* Prepared by CH2MHILL.

Pitt, R. 1999. Department of Civil and Environmental Engineering, University of Alabama at Birmingham.

Prince Georges County, Maryland, Department of Environmental Resources (PGDER), 1999. *Low-Impact Development Design Strategies, An Integrated Design Approach*. Prince Georges County, Maryland.

Pudget Sound Action Team. 2003. Natural Approaches to Stormwater Management: Low Impact Development in Pudget Sound. Olympia, WA.

Rhode Island Department of Environmental Management (RIDEM). 1993. *State of Rhode Island, Stormwater Design and Installation Standards Manual.* Providence, RI.

Schueler, Tom. 1995. *Environmental Land Planning Series: Site Planning for Urban Stream Protection.* Silver Spring. MD.

Schueler, T.R., Kumble, P.A., and M.A. Heraty. 1992. *A Current Assessment of Urban Best Management Practices: Techniques for Reducing Non-Point Source Pollution in the Coastal Zone.* Department of Environmental Programs. Metropolitan Washington Council of Governments.

Schueler, T.R. 1994. "The Importance of Imperviousness". *Watershed Protection Techniques.* Vol. 1, No. 3.

Schueler, T.R. 1995. *Site Planning for Urban Stream Protection.* Metropolitan Washington Council of Governments. Washington, D.C.

Schueler, T.R. 1999. "Microbes and Urban Watersheds". *Watershed Protection Techniques.* Vol. 3, No. 1.

Schueler, T.R., Kumble, P.A., and M.A. Heraty. 1992. *A Current Assessment of Urban Best Management Practices: Techniques for Reducing Non-Point Source Pollution in the Coastal Zone.* Department of Environmental Programs, Metropolitan Washington Council of Governments.

Seattle Public Utilities District. 2003. Street Edge Alternatives (SEA Streets) Project. http://www.seattle.gov/util/About_SPU/Drainage_&_Sewer_System/Natural_Drainage Systems/Street_Edge_Alternatives/index.asp

Soil Conservation Service. 1986. *Urban Hydrology for Small Watersheds, USDA Soil Conservation Service Technical Release No. 55.* Washington, D.C.

Stahre, Peter and Urbonas, Ben. 1990. Stormwater Detention For Drainage, Water Quality, and CSO Management. Prentice Hall: Englewood Cliffs, NJ.

Traintor, Frederick F. 2001 *Farming and Forestry Strategies.* Providence, RI.

Treadway, Elizabeth and Reese, Andrew. (2000). *"Financial Strategies for Stormwater Management." APWA Reporter*. Houston: American Public Works Association.

United States Environmental Protection Agency (EPA), 2002. *National Management Measures to Control Nonpoint Source Pollution from Urban Areas (Draft).* Washington, D.C.

United States Environmental Protection Agency (EPA). 1983. *Results of the Nationwide Urban Runoff Program, Volume 1, Final Report.* Water Planning Division. Washington, D.C. NTIS No. PB 84-185 552.

United States Environmental Protection Agency (EPA). [no publication date]. *Post-Construction Storm Water Management in New Development & Redevelopment: Alternative Turnarounds.* http://cfpub.epa.gov/npdes/stormwater/menuofbmps/post_2.cfm

US Environmental Protection Agency (EPA) New England. (2009). "*Funding Stormwater Programs" (Report No. EPA 901-F-09-004).*

Walker, W. 1990. *P8 Urban Catchment Model.* IEP, Inc. for the Narragansett Bay Project NBP-90-50. Narragansett Bay Project: Providence, RI.

# Appendix A

## Stormwater Drainage Manual—Town of Newington

20130123.A10

# STORMWATER DRAINAGE MANUAL

# TOWN OF NEWINGTON

**MAY 2000**

***Prepared for:***

Town of Newington
Engineering Department

***Prepared by:***

Milone & MacBroom, Inc.
716 South Main Street
Cheshire, Connecticut 06410

# STORMWATER MANAGEMENT GUIDELINES
# NEWINGTON, CONNECTICUT

***Prepared for:***

Town of Newington
Public Works Department
Engineering Division

***Prepared by:***

Milone & MacBroom, Inc.
716 South Main Street
Cheshire, Connecticut 06410

(203) 271-1773

MILONE & MACBROOM

## Introduction

The purpose of this drainage manual is to define stormwater management guidelines and specifications for all new drainage systems in the Town of Newington. This manual includes design criteria to be used, construction standards, and general details for detention and retention basins, underground storage and dry wells, environmental mitigation procedures, plus erosion, sediment, and environmental controls.

The manual is applicable to all land use and development projects regulated by the Town of Newington, plus public road construction and drainage discharges to public roads.

The guidelines do not supersede other existing State and Federal regulatory programs unless the Town Regulations are more restrictive.

# TABLE OF CONTENTS

Introduction

Section A. Stormwater Management Guidelines
- I. Goals and Objectives
- II. Stormwater Management Reports
- III. Hydrology
- IV. Conveyance Systems
- V. Stormwater Quality
- VI. Easements and Rights-of-Way

**Appendix A**
Town of Newington Addendum #1

**Appendix B**
Computation Forms and Aids
- SCS Time of Concentration
- Rational Formula Coefficients
- Storm Drainage Computational Form
- Culvert Computation Form
- Hartford Area Rainfall Intensity – Duration

**Appendix C**
Typical Management Measures

**Appendix D**
Typical Details

# A. Stormwater Management Guidelines

## I. Goals and Objectives

### A. Applicability

These stormwater management guidelines apply to all land use and development projects regulated by the Town of Newington, including:

- Zoning Permits
- Subdivision Permits
- Inland Wetland Permits

The guidelines also apply to all public road construction and drainage discharges to public roads. The Town Engineer may waive submission requirements if all goals and objectives have been met. The waivers shall be in writing and shall state the reason for the waiver.

### B. Objectives

Stormwater management plans achieve the following water and natural resource management objectives:

1. Reduce the rate of runoff from new land development to minimize increases in flooding, flood damage, and inconveniences caused by excess stormwater;

2. Reduce the soil erosion potential due to development or construction projects;

3. Assure the adequacy of existing and proposed culverts, detention basins, storm drainage systems, bridges, channels, and dams;

4. Increase water recharge into the ground;

5. Decrease nonpoint source pollution and water quality degradation;

6. Maintain stream channels for their biological, recreational, and aesthetic functions as well as for conveyance of runoff;

7. Increase opportunities for preserving open space through stream corridor and floodplain protection; and

8. Increase recreational opportunities through the multiple use of stormwater facilities.

C. Basic Components

The basic components of stormwater management include:

1. Off-Site Analysis: All proposed projects must identify the upstream tributary drainage area and perform a downstream impact analysis. The levels of analysis required depend on the size of the project and its potential drainage impact, as determined by the Town Engineer.

2. Peak Runoff Control: *Proposed projects should provide runoff controls to limit the future peak rates of runoff to the pre-development peak rates whenever there would be adverse conditions downstream as determined in the Stormwater Management Report or by the Town Engineer.*

3. Nonstructural Drainage Systems: Storm drainage systems should emphasize nonstructural approaches where possible to controlling runoff, encouraging the infiltration of rainfall into the soil and preservation of natural drainage patterns.

4. Riparian Buffers: Natural vegetated riparian buffers shall be preserved along watercourses and around wetlands wherever possible. The recommended minimum buffer width is 50 feet measured from the wetland boundary or the watercourse's ordinary high water mark. *The actual buffer width should reflect site conditions such as vegetation density, slope, and resource value.*

5. Erosion/Sedimentation Control Plan: All plans for proposed projects that propose to disturb a minimum of one-half acre of land or construct new, or modify existing drainage facilities, must include a plan to install measures to control soil erosion and sedimentation during construction.

6. Stormwater Runoff Quality: Storm drainage systems should minimize the discharge of pollutants into waterbodies through the use of measures that minimize sources of pollution and transport of pollutants. The goal is to remove 80 percent of the total suspended solids. Activities with over five acres of disturbed areas shall have a sediment basin with at least 134 cubic yards of capacity per acre drained to it (see Appendix C for other measures). *In addition to local regulations, stormwater runoff is also regulated by the*

*Connecticut Department of Environmental Protection National Pollutant Discharge Elimination Systems (NPDES) program.*

7. Conveyance System: All conveyance systems for proposed projects must be analyzed, designed, and constructed to accommodate existing upstream off-site runoff and developed on-site runoff.

8. Discharge Location: The runoff from proposed project sites should be located at natural watercourses or man-made drainage systems with adequate capacity, minimizing diversions.

9. Maintenance and Operation: Maintenance of all drainage facilities constructed or modified by a proposed project on private property is the responsibility of the property owner. Maintenance and operational plans and schedules are required.

10. Registered Professional Engineer: All stormwater management plans, reports, and computations shall be performed by, signed, and sealed by a licensed Professional Engineer registered in the State of Connecticut and who is experienced in the field of water resources.

11. Post Construction: Prior to the Town's issuance of a Certificate of occupancy, the drainage design engineer must certify in writing that the storm drainage system as-built conforms to the approved plans.

## II. Stormwater Management Reports

Stormwater management reports are required for all subdivision applications, inland wetland applications, zoning applications, public road construction, and discharges to public roads except when waived by the Town Engineer if the applicant demonstrates that the stormwater goals and objectives have been met. Stormwater management reports should include:

1. Topographic Contour Map(s) showing drainage area(s). For small areas, MDC topography maps shall be used. For larger areas (greater than 200 acres), USGS maps may be used with the approval of the Town Engineer and in conjunction with the MDC topography maps.

2. Floodplain boundaries as defined on the Newington Flood Insurance Study, Flood Boundary and Floodway Map, and inland wetland boundaries.

3. An inventory (onsite and immediately downstream) of watercourses, including areas of limited flow capacity, bank or bed erosion, sediment deposition, DEP water quality classification, principal water uses and users, recreation areas, morphology classification, and channel stability. This inventory is to identify existing or potential problem areas and issues.

4. An inventory and evaluation of on-site and downstream hydraulic structures, including culverts, bridges, dams and dikes with information on their site flow capacity and physical condition. The downstream zone of influence extends to where the site's peak 100-year runoff is less than ten percent of the total watershed's peak runoff. For example, if a site's runoff is 25 CFS, then the zone of influence extends to where the watershed's peak flow is 250 CFS for the same storm frequency. This inventory is to identify the adequacy of downstream drainage facilities potentially impacted by the proposed project

5. An inventory map or list of significant on-site flood water storage areas, including impoundments, floodplains, and wetlands.

6. Identification of the peak rate of runoff at various key points in the watershed and the relative timing of the peak flow rates.

7. Identification of hydraulic structures or watercourses that are inadequate under existing or anticipated future conditions.

8. Recommendations on how runoff is to be managed to minimize any harmful downstream impacts.

9. Recommendations for drainage improvements for existing and future runoff conditions.

10. Written description and computations including the following information:

    a. Method used to calculate storm runoff.

    b. Runoff characteristics of the property before and after development.

    c. Drainage calculations.

    d. Maximum flow velocity and quantity at key points and points of discharge from the total system.

e. Design calculations for all drainage piping, structures, riprap and swales.

f. The evaluation of existing storm drain systems for the peak flow rates anticipated for future maximum development of their drainage areas and recommended method for solving deficiencies.

g. All ponding calculations at low points within pavement areas or grass areas.

h. Dry well computations along with perc test information.

11. A complete set of construction plans showing, in Plan and Profile, all storm drain piping, channels, and structures to be incorporated in the system, including top of frame and flowline elevation, along with details of any special or unusual structures. This will also include a complete Soil Erosion and Sediment Control Plan following the requirements outlined in the "Connecticut Guidelines for Soil Erosion and Sediment Control" as prepared by the Connecticut Council on Soil and Water Conservation latest edition.

12. All computer model input and output data shall be submitted with both paper and digital (disk) formats.

## III. Hydrology

### A. Methods

1. The stormwater management report for individual sites shall address any adverse increases in the peak flow rate, the timing of runoff and the volume of runoff. Hydrology studies shall be conducted at a level of detail commensurate with the probable impact of the project and should extend downstream to where the proposed project has less than a ten percent increase in the watershed's peak flow rates. Below this point, the proposed project has little hydrologic impact.

2. The peak rates of runoff from simple watersheds with less than 200 acres of land and with no significant surface impoundments shall be computed with the Rational Method, as described in ASCE Manual of Practice #37 and with runoff coefficients based upon both land use and soil types. The Rational Method shall be used for designing peak flow attenuation (detention) systems in

watersheds less than 30 acres in size (see Appendix A), or in watersheds with significant storage.

3. A complete runoff hydrograph evaluation is required for projects resulting in significant impacts, watersheds with significant surface water storage or impoundments, and other critical activities as determined by the Town Engineer. Hydrograph evaluations shall be conducted for existing and anticipated land use conditions for storms with average return frequencies of 1, 2, 10, 25 and 100 years.

4. On the larger streams, peak flow rates may be obtained from the Newington Flood Insurance Study and map, as amended from time to time.

5. The US Soil Conservation Services hydrology methods (TR-55, TR-20) or U.S. Army Corps of Engineers Methods (HEC-1) may be used to compute runoff hydrographs for watersheds of over 100 acres and when the volume of runoff if necessary (detention basins, etc.) for watersheds over 30 acres in size.

   Hydrograph evaluations shall be conducted for existing and anticipated land use conditions, based upon the approved Zoning Map. The hydrograph analysis shall include determination of runoff for each subwatershed and routing runoff through storage impoundments and floodplain storage areas. The timing sequence of the runoff must be fully developed. Subwatersheds shall be selected to determine flows at key structures as well as to determine runoff from areas prone to development. The analysis must isolate and identify that portion of the peak flow at critical downstream points which is due to the project site.

   The following 24-hour rainfall amounts shall be used:

| Storm Frequency (Year Storm) | Inches of Rainfall |
|---|---|
| 2 | 3.2 |
| 5 | 4.1 |
| 10 | 4.7 |
| 25 | 5.5 |
| 50 | 6.2 |
| 100 | 6.9 |

   The SCS Type III rainfall distribution pattern shall be used with Antecedent Moisture Condition II.

6. The time of concentration used for all hydrology methods should be based upon use of multiple segment flow paths as described in the Soil Conservation Service TR-55 manual and reflect field conditions. The computations must be submitted.

   The time of concentration shall be computed on the sum of travel times for overland flow, shallow concentrated flow, channels, and time in pipes. The minimum time of concentration shall be ten (10) minutes for storm sewer design, in Subdivision, and five (5) minutes for paved parking areas, retail/commercial centers, and central business area.

7. The design storm criteria varies for each site-specific project. There are both economic and practical considerations. Drainage systems or structures whose failure would cause loss of life and property damage or require long detours are designed to higher standards than routine systems. The following factors should be considered in establishing the design storm frequency:

   <u>Design Storm Frequency Factors</u>

   Replacement cost of the structure
   Risk of upstream damage
   Risk of downstream damage
   Potential loss of life
   Environmental impact
   Average daily traffic
   Detour length

Typical design storm frequencies are shown below:

| Drainage Structure Type | Typical Design Storm Frequency, Years |
|---|---|
| Stormwater treatment systems | 1" of runoff |
| Catch basins and gutters without sags | 10 |
| Catch basins and gutters with sags | 25 |
| Residential Zone storm drains without sags | 10 |
| Residential Zone storm drains with sags | 25 |
| Industrial and Commercial Zone storm drains laterals | 10 |
| Industrial and Commercial Zone storm drains interceptors | 25 |
| Local road storm drains | 10 |
| Local dry wells | 25 |
| Minor drainage swales and channels | 25 |
| Major channels (FEMA study) | 100 |
| Road culverts | 25-100 |
| Bridges | 100 |
| Detention basins | 25-100 |
| Low-hazard small dams | 100* |
| High hazard large dams | 1/2 PMF-PMF* |
| Flood control channels | 100-500* |

*Connecticut DEP Criteria apply to State regulated dams and channels.
PMF = Probable maximum flood

In selecting the design storm criteria, the local on-site conditions should be considered as well as the minimum regulatory requirements. The consequences of peak runoff rates exceeding the design flow must be considered with secondary overland flow provisions for reducing the chance of damage from excess flows.

Secondary overland flow relief systems:

| | Frequency, Years |
|---|---|
| - Low density and residential | 25 |
| - Commercial, industrial, business, and minor streams | 50 |
| - Along major watercourses | 100 |

B. Peak Flow Attenuation

1. The discharge of stormwater runoff from development sites must not cause adverse downstream conditions. When required by the Town Engineer, stormwater runoff must be controlled so that during and after development, the site will generate no greater peak flow than prior to development for a 2-, 10-, 25- or 50-year, and 100-year 24-hour storm considered individually.

   a. Attenuation of the 2-year storm is intended to achieve the stream channel erosion control objective.

   b. Attenuation of the 10, -25-, and/or 50-year storm is intended to assure the adequacy of existing and proposed culverts and storm drain systems.

   c. Attenuation of the 100-year storm is intended to reduce the rate of runoff from development to prevent expansion of the 100-year floodplain so as to alleviate flooding of improved properties and roadways.

2. The techniques available to attenuate changes in the peak flow rates include, but are not limited to, the following:

   - Limiting impervious coverage
   - Maintaining or increasing travel times
   - Groundwater recharge
   - Preserving wetlands and natural depressions
   - Stormwater detention facilities
   - Extending the time of concentration

C. Local Stormwater Management

The following measures shall be applied to individual lots or parcels of land where required by the Town Engineer:

1. Roof Runoff: Where feasible, such as pervious soils or large lots, roof runoff should either be directed into drywell or gallery infiltration systems sized to contain one inch of rooftop runoff or onto stable vegetated soils for at least 50 feet to encourage infiltration and groundwater recharge. Excess roof runoff may be directed overland or to watercourses or storm drains via grass swales or perforated drain pipes. It shall not cross sidewalks or parking areas. The area around the building perimeter shall be graded to drain away from the building.

2. Parking Lot Runoff: Parking lots constructed over pervious soils (excessively and well drained or well drained as defined by the Soil County Soil Survey) shall be designed to encourage groundwater recharge infiltration systems sized to contain one inch of parking lot runoff. Parking lots with heavy usage or near sensitive areas shall include measures to reduce the chance of groundwater contamination, including oil traps, sediment basins, vegetated filters, etc. prior to infiltration systems. The use of grass median strips and depressed islands is encouraged.

3. Sheet Flow: Runoff shall be dispersed into sheet flow across natural or artificially vegetated areas wherever possible.

D. Stormwater Detention Facilities

Stormwater detention facilities to temporarily store excess runoff may be used to control peak flow rate and duration of downstream flows when coordinated with the runoff characteristics of the watershed in which they are located and the local site conditions. Detention facilities are generally appropriate in the upstream two-thirds of a watershed or if downstream flood or erosion problems exist. Section V of this document addresses stormwater quality treatment measures.

Detention facilities may include, but are not limited to:

- Detention basins (less than 12 hours to drain)
- Extended duration retention basins (over 12 hours to drain)
- Landscaped depressions (also called bio-retention areas)
- Subsurface cisterns
- Ponds

1. Any detention facility whose failure could cause significant damage or loss of life may be regulated as a dam by DEP pursuant to Sections 22a-401 through 22a-409 of the General Statutes.

2. All detention facilities serving a watershed larger than 30 acres in size shall be analyzed with hydrograph and storage routing techniques such as TR-20 or HEC-1. For watersheds of less than 30 acres, detention systems should be sized to contain the development's increase in runoff volume as per Appendix B.

3. The release rate shall consider the existing and proposed flow rates at the site and downstream channels or structures and the timing of runoff from other subwatersheds within the basin for the design flood.

4. The waters released from a detention facility shall not increase the peak flow rate at off-site downstream points unless they have adequate flow capacity.

5. The discharge rate from extended duration (over 12 hours) detention facilities into alluvial or eroding channels shall not exceed the channel's bank-full capacity or the two-year flood frequency flow, whichever is less, unless it is determined said channel will be stable.

6. Section 8E of the "Connecticut Guidelines for Erosion and Sediment Control" as may be amended shall be used as a guide to construction details and materials. The minimum free board for the 100-year storm is one foot.

7. An operation and maintenance schedule shall be prepared for every detention facility identifying responsibilities and items of routine maintenance, after use and emergency operations in the event of a flood.

8. An emergency discharge outlet shall be provided with a capacity equal to the discharge from a 100-year frequency flood, with routing computations.

9. The detention facilities may be designed as a multipurpose sedimentation basin for use during and after construction.

10. The design of a detention basin facilities shall include the following data:

    a. Plan with a scale of not less than 1"=40' showing proposed contours with a 2-foot interval.

    b. Details of the outlet.

    c. Inflow hydrograph with outflow hydrograph superimposed on it.

    d. Cross sections of the embankment and spillway.

    e. Inflow mass curve.

    f. Elevation - storage curve or table.

    g. Elevation - discharge curve or table.

h. Flood-routing calculations.

i. Written comments on the subsurface conditions relative to water table, ledge, and soil permeability.

j. Time which is required for the facility to drain completely. For basins that are normally dry, the bottom of the basin will be pitched on a minimum slope of one percent to the outlet area.

k. Materials used in construction of the facility.

l. Methods employed to avoid clogging the discharge mechanism.

m. Fencing, if required for public safety.

n. Proposed landscaping and vegetative measures used to stabilize slopes and bottom surfaces.

o. A wildflower seed mixture in place of grass seed along all non-lawn areas is encouraged for aesthetic and non-maintenance purposes.

p. The designer will make note on the construction drawings that all detention areas are to be built and stabilized as soon as possible.

## IV. Conveyance Systems

### A. General Conditions

1. Priority should be given to maintaining natural drainage systems, including perennial and intermittent streams, swales and drainage ditches in an open condition.

2. The conveyance systems shall be designed to minimize changes in the runoff travel time via the use of overland flow, grass lined channels, surface depression storage, etc.

3. The conveyance system shall be planned to accommodate both frequent and infrequent storm events, using a combination of primary and secondary (auxiliary) facilities, and to minimize soil erosion. Secondary drainage systems convey flows that exceed the capacity of primary systems, usually via overland flow.

4. Closed storm drain systems (i.e., those involving a storm drain pipe or culvert) should be designed to:

   a. Have a minimum capacity of the 10-year frequency storm flow for laterals within the closed storm drain system in Residential Zones and in Commercial and Industrial Zones; and

   b. Consider secondary overland conveyance of excess flow for the primary storm (generally over the top of the closed storm drain system or roads) (see Section III-A-7).

5. Culverts and bridges should not impede the movement of fish and other aquatic species in stocked and perennial watercourses.

6. All storm drainage systems shall be designed and constructed to accommodate runoff from upstream land areas.

B. Storm Drainage Systems

Conventional stormwater drainage systems usually consist of catch basins with surface inlets connected to underground drain pipes. Drainage systems are used to collect surface runoff from roads, buildings, and parking lots and to convey the runoff to watercourses.

All subsurface storm drainage systems shall be designed in accordance with the Manning equation and the methods and procedures defined in the Connecticut Department of Transportation Drainage Manual prepared by the Division of Design, Bureau of Highway, as may be amended in the following requirements:

1. Roads, parking lots, and site developments should be graded so that runoff in excess of the primary storm drainage system capacity will flow overland to watercourses without obstruction.

2. The hydraulic design of local storm drainage systems usually begins at the upstream end of the system and proceeds downstream. The design follows the runoff from upland sources, including the analysis of overland sheet flow, gutter flow, channels, catch basins, and storm drains to discharge points into established waterbodies.

3. The hydraulic analysis of grass swales, gutters, catch basins, and storm drain pipes normally assumes that the flow is steady state (i.e., constant with respect to time) and uniform.

4. Storm drainage systems for small watersheds less than 200 acres will normally be designed with the use of the Rational Method to predict the peak flow rates. The storm drains shall accommodate all runoff from upstream areas, including adjacent lands outside the property to be developed.

5. The hydraulic design of storm drain pipes, swales, and gutters shall normally be based upon use of the Mannings Equation.

6. Drainage pipes will be designed to flow just full or below full during the peak flow of the design storm, with a minimum diameter of 12 inches and a minimum slope of 0.005 feet per foot.

7. Design computations shall be prepared on the appropriate forms contained in the Appendix.

8. Storm drains shall be designed to flow full. Inlet control will be analyzed as to determine if it will control the pipe size. Calculations will be submitted. When slopes are less than 1.0 percent, outlet control conditions shall be calculated.

10. Storm drains will be designed to maintain a velocity of 2.0 feet per second when the pipe is one-quarter full.

11. A minimum cover of two feet over the crown of the pipe shall be provided for all storm drains, except in streets which shall have a minimum cover of 2.5 feet in relation to the centerline grade of the streets.

12. Underdrains shall be provided as required by shallow groundwater. Underdrain outlets shall be connected to drainage structures whenever practical. When impractical, they shall be terminated at an approved watercourse.

13. Values for roughness coefficient "N" to be used in Manning Formula for pipes shall be based on the following:

Roughness Coefficient:

A. Reinforced concrete or ADS Pipe:

| | | |
|---|---|---|
| 1. | 15 inches through 30 inch | n = 0.015 |
| 2. | 36 inch and larger | n = 0.013 |

B. Asphalt coated corrugated metal pipe

| | | |
|---|---|---|
| 1. | Unpaved invert | n = 0.024 |
| 2. | Paved invert | n = 0.019 |
| 3. | Smooth flow | n = 0.013 |

14. Reinforced Concrete Pipe class shall be Class IV (minimum) with gasket joints and is to be indicated on the drawings.

15. Any deviation in the pipe materials or use of slopes over 10 percent shall be reviewed and approved by the Town Engineer before it is accepted and shown on the proposed plan.

16. Foundation drains of buildings connected into storm drainage systems shall be designed to prevent backflow into the building and shall be identified in an agreement filed in the land records.

17. Surface runoff shall be directed through vegetated filter strips or grass swales wherever possible prior to storm drain inlets or catch basins.

18. The design of the storm drainage system must be coordinated with the soil erosion and sediment control plan.

All permanent storm sewer pipe installed within the public street right-of-way shall be concrete pipe with a rubber gasket joint or ADS pipe with a rubber gasket joint, unless specifically waived by the Town Engineer. The general exception to this policy will be:

a. Where ground conditions require use of an underdrain system.
b. Where slope of pipe will be ten (10) percent or greater.
c. In rock cuts, only reinforced concrete pipe shall be used.
d. Where facility may be considered temporary in nature.
e. Where facility is on private property and remain private.
f. Where ADS pipe is used, the last section shall be concrete pipe.

C. Catch Basins

1. The first catch basin in a storm drain system shall be located within 300 feet of the roadway summit. Catch basin spacing and type shall be determined from the following guidelines or by the gutter flow analysis. A drainage structure shall be placed at each grade change, horizontal direction change, and at the junction of two or more drains.

2. A guide for installing catch basins shall consider the following as maximum spacing requirements:

   a. Where road grade is 5% or less – 400 feet
   b. Where road grade is 5% to 8% - 350 feet
   c. Where road grade is greater than 8% - 300 feet

   Field conditions may require the installation of modified or special catch basins, for example:

   a. Low point area of street or lot may require installation of a double grate structure.
   b. Street slope or quantity of water may require the use of a double grate structure perpendicular to the curbline to eliminate by-pass flow around structure.
   c. When required by gutter flow analysis.

3. All catch basins within intersectional areas are to be located five feet before all Point of Curvatures (P.C.'s) and Point of Tangents (P.T.'s) along the curb alignment.

4. A complete "Gutter Flow Analysis" will be performed when requested by the Town Engineer to determine catch basin spacing and need for double basins in roadway sags. Flooding shall not exceed one half of the lane width. The design procedures outlined in the State of Connecticut Department of Transportation "Drainage Manual" latest edition shall be followed.

5. All catch basins shall have a sump to trap sediment. The sump shall be a minimum 24-inches deep below the lowest pipe invert. Catch basin sumps must be watertight.

6. Catch basins subject to potentially high pollutant loads of floatable material shall be equipped with a hood or baffle to prevent discharge of floating material and have a sump at least 36 inches deep below the lowest pipe invert.

7. Catch basins subject to potentially high runoff pollution loads shall not receive storm drain pipe discharges into them, to minimize suspension of sediments and pollutants. Separate manholes are to be used for the storm drain pipe junctions.

D. Culverts and Bridges

The hydraulic analysis and design of culverts have to consider the orifice flow conditions at the inlet, the capacity of the pipe itself, and the effect of the depth of water at the outlet. All flow conditions have to be analyzed to see which is more restrictive.

Culverts and storm drains whose outlets are submerged or partially submerged often have their flow capacity limited by the tailwater depth at the outlet. This is of particular interest when discharging into rivers or tidal waters with variable water elevations.

Bridges are designed to have a clear free board between the bottom of their deck and the water surface. They are not designed to flow under pressure and do not have a solid structural base.

All culverts and bridges shall be designed in accordance to the methods and procedures defined in the DOT Drainage Manual and shall meet the following requirements:

1. Culverts and bridges will be designed for flood frequencies and under-clearances stipulated in the DOT Drainage Manual, except that on local (not State highways) roads and driveways with low traffic volumes and where alternate routes are available, lower design criteria is acceptable when:

   a. Water surface elevations shall not be increased by more than one foot, nor allowed to cause damage to upstream properties;

   b. Provisions are made to barricade the road when overtopped; and

   c. The road or driveway is posted as being subject to flooding.

2. Bridges and culverts along stocked watercourses and watercourses which may support fish shall be designed to allow passage of fish as recommended by the Department of Environmental Protection Fisheries Unit.

3. The location of new bridges and culverts shall minimize the relocation of watercourses.

4. Where applicable, rigid structure floors at bridges and culverts should be depressed below the normal streambed to allow an alluvial streambed to form over them and shall anticipate if the streambed is degrading.

5. The use of solid parapet walls at bridges and culverts located in the sag part of vertical curves is discouraged due to their blockage of flows overtopping the bridge.

6. Debris barriers shall be used upstream of structures prone to blockage by debris, rock slides, or vegetation.

7. The use of a single large culvert or bridge opening is preferred over use of multiple small openings.

8. The underclearances and maximum headwaters stipulated in the DOT Drainage Manual may be waived by the Town Engineer when decreasing the headwater depth at existing structures which could increase downstream peak flows.

9. All wingwalls and walls and culvert ends with vertical drops over four feet shall have barrier rails or fences. Object markers shall be used for vertical drops of less than four feet.

E. Open Channels

The analysis and design of open channels shall be consistent with the type of channel and its intended purpose. Channels shall be classified as local drainage channels or as watercourse channels, depending on use, and shall be classified as alluvial or non-alluvial based upon their geologic characteristics. Land clearing and land grading within a natural stream corridor should be avoided or minimized, except at stream crossings, so that streams remain in a natural state.

Care should be exercised to ensure that riparian vegetation, including grasses, shrubs and trees in the stream corridor or along the watercourse, remain undisturbed during land clearing, land grading, and land development. A 50-foot wide vegetated buffer area is desired on both sides of natural streams.

1. Type A open channels are local drainage channels with a primary purpose of conveying urban, parking lot and road runoff from small watersheds, frequently with intermittent flow and limited ecological value and are intended to convey their design flow within their banks.

They shall be designed in accordance with the DOT Drainage Manual and:

a. Freeboard allowances shall be provided in proportion of the potential damages that could occur in the event of overtopping;

b. The use of impervious linings is discouraged except for very high velocity flow and steep slopes; and

c. Channels shall be designed with a compact cross-section to concentrate low flows.

2. Type B open channels are natural perennial watercourses or man-made perennial channels planned to simulate a natural watercourse. They shall be designed in accordance with the DOT Drainage Manual and the Connecticut Diversion Permit policies (where applicable).

3. Channel restoration plans shall be prepared for all type B open channel projects. The plan shall help restore and/or create an aquatic habitats suitable for fisheries, while maintaining or improving water quality, recreation, aesthetics and flow capacity. Coordination with the Fisheries and Wildlife Units of DEP is recommended.

F. Storm Drainage Discharge Points

1. The discharge of all stormwater that has been collected or otherwise artificially channeled shall be into suitable natural streams or, with approval, into Town or State drainage systems with adequate capacity to carry the discharge. Otherwise, there shall be no discharge onto or over private property within or adjoining the street unless (a) proper easements and discharge rights have been secured by the applicant; (b) such easements and rights are transferable; and (c) there will be adequate safeguards against soil erosion and flood hazards.

2. No stormwater shall be diverted from one watershed to another without proper DEP Diversion permits and an evaluation of downstream impacts.

3. Storm drainage discharges shall be coordinated with the National Pollution Discharge Elimination System permit program administered by the Connecticut Department of Environmental Protection, which regulates certain types of discharges and diversions.

4. Storm drainage discharge points shall be selected to minimize their environmental impact.

5. All storm drain system outlets shall be terminated with an approved outlet structure to minimize soil erosion. Section 7.4.16 of the Newington Zoning Regulations require the use of a headwall or flared end section at storm drain sewer outlets to watercourses.

6. Stormwater drainage which discharges into rivers and lakes shall consider the hydraulic impact of having drainage outlets submerged (tailwater effect). The preferred method of determining tailwater levels on non-tidal rivers is based on the use of FEMA Flood Insurance Studies available from the Town Clerk and DEP. Published studies are available for most rivers with watersheds of over one square mile and they include flood water elevations for events with average return frequencies of 10, 50, 100, and 500 years.

   Historic flood levels and high water marks may be available in some areas and are helpful in estimating tailwater levels.

   Tailwater levels can be computed by determining the water profiles in rivers using the Mannings Equation for uniform flow and the standard step method for non-uniform flow.

V. Stormwater Quality

1. Stormwater drainage systems should include provisions for the treatment of surface runoff to minimize the sources and transport pollutants. Applicants should verify if their projects are subject to the DEP NPDES Phase I or pending Phase II requirements. The NPDES stormwater and construction site regulations are currently being revised.

2. The "Guidelines for Soil Erosion and Sediment Control," Connecticut DEP, January 1985, as amended time to time will be used as the minimum standard for the design of erosion and sediment control measures.

3. Small volumes of runoff from small areas can usually be controlled with on-site pollution control measures. The recommended techniques include use of sheet flow through vegetated areas, rooftop runoff infiltration, use of pervious surfaces, grass-vegetated swales, catch basins with sumps, catch basin-dry well combinations, and sediment basins or chambers.

The following activities are capable of generating significant levels of pollution and require formal stormwater management plans:

- All development and construction projects affecting over five acres of disturbed soil;
- All sites with over one acre of impervious cover;
- Residential development with three or more units;
- Industrial and commercial projects;
- When required by CT DEP;
- Primary aquifer recharge areas.

Infiltration Systems

Infiltration of on-site runoff by use of vegetated depressions and buffer areas, pervious surfaces, drywells, infiltration basins and trenches permits recharge of groundwater and provides water quality treatment through soil filtration.

Infiltration systems should be provided by a sediment control system to reduce soil clogging.

Long Duration Wet Pond Retention Systems

Long duration retention by use of wet ponds and wetlands constructed in upland areas provides for the storage of collected runoff in a holding area prior to release in a waterway allowing quality treatment by sedimentation, flocculation, and biological removal. Retention is used when post-development runoff volume is expected to exceed the capabilities of infiltration and where significant channel erosion occurs downstream. Wet ponds have permanent pools of water and require sufficient watershed area to maintain them.

Extended Duration Detention/Sediment Systems

Extended duration detention sediment systems provide for the temporary storage of collected runoff in a holding area prior to release into a waterway. Settling is the primary pollutant removal mechanism. The degree of removal is dependent on whether a given pollutant is in particulate or soluble form. Removal is likely to be quite high if a pollutant is a particulate, whereas very limited removal can be expected for soluble pollutants. The detention period is typically about 24 hours.

Extended detention can provide thermal benefits to a trout stream. By using a perforated, low-flow drain pipe encased in a gravel jacket having all adequate mass, extended detention may be used to dissipate heat and cool stormwater runoff prior to its discharge to a trout stream.

## VI. Easements and Rights-of-Way

A. Maintenance roads and easements shall be provided for all permanent facilities. The road shall be 12 feet wide, having 12 inches of processed gravel subbase and surface treated. The gradient shall not exceed 15 percent.

The use of public streets or fill embankments of public streets as the dam and/or spillway for detention ponds will not be permitted.

B. A channel or brook right-of-way of sufficient minimum width to include a 10-foot access strip in addition to the width of the channel or brook from bank top to bank top shall be offered for dedication to the Town for drainage purposes and maintenance.

C. The following drainage right-of-way criteria apply to subsurface storm drains:

Drainage Right-of-Way for Pipe:

| Pipe Size | Minimum Width | Location of Centerline of Pipe or Ditch |
|---|---|---|
| Under 24" | 20 feet | 5' from either edge of drainage ROW |
| 30" to 48" | 25 feet | 10' from either edge of drainage ROW |
| 54' to 72' | 35 feet | 15' from either edge of drainage ROW |

D. Where proposed storm drains discharge into an existing natural watercourse, an unlimited "Right to Drain" agreement from the adjacent property owner is required.

E. Section 3.72, 3.73, and 3.74 of the Newington Subdivision Regulations, pertaining to drainage easements, is incorporated by reference for subdivision applications.

## VII. Materials

All materials for pipes, structures, catch basins, manholes, riprap, silt fence, etc. shall conform with ConnDOT Standard Specifications as amended from time to time.

j18smg-jea.doc

# APPENDIX A

## SUMMARY – TOWN OF NEWINGTON DRAINAGE ANALYSIS AND DESIGN REQUIREMENTS INCLUDING ADDENDUM #1

# TOWN OF NEWINGTON

## DRAINAGE ANALYSIS AND DESIGN REQUIREMENTS

A complete storm drainage analysis prepared and certified by a Professional Engineer, registered in the State of Connecticut, shall be made in accordance with sound engineering practices and constructed to the requirements of the Town of Newington. The criteria noted below will be adequate for most conditions. However, the criteria may be altered if, in the opinion of the Town Engineer, an upgrading of these standards is required.

## DESIGN FREQUENCY

Pipe Design (Surface Drainage):

A. Residential street drainage - lateral system - 10 year design, trunk line - 10 year design, except in sag areas where property damage is likely, due to flooding.

B. Commercial, Industrial, Central Business - lateral system - 10 year design, trunk system - 25 year design.

Major Ditches, Channels and Dry Weather Courses (defined as natural or man made water course which is tributary to an existing stream and defined on M.D.C. topography maps) - 25 year design.

Existing Major Streams and Their Improvements as Defined by HUD Insurance Program (which may include Abutting Flood Plain) - 100 Year Design. For streams not covered by HUD Insurance Program the frequency may be reduced to 50 year design.

Positive Overland Flood Relief Without Property Damage - 25 year design in residential and 50 year in Commercial, Industrial and Central Business District.

## TIME OF CONCENTRATION

The time of concentration shall be computed on the sum of overland flow time, time in ditches, and time in pipes. The minimum time of concentration shall be ten (10) minutes for storm sewer design, in Subdivision, and five (5) minutes for paved parking areas, retail/commercial centers, and central business area.

## RUNOFF FACTORS

The following runoff factors shall be used:

A. Paved or impervious areas - 0.9
B. Steep slopes (over 15%) - 0.5 to 0.7
C. Lawn residential and park areas (less than 15% slope)--0.25 to 0.45.
D. Undeveloped land 0.15 to 0.25 (depending on slope)

Weighted runoff factors are to be used in drainage computations. Runoff factors for adjacent undeveloped land are to be computed on the "complete upstream development of land based on existing zoning or land use as proposed by Master Plan whichever causes higher runoff". The Town Engineer may modify this requirement where the watershed storm water management program calls for storm water retention upstream of subject site.

## DESIGN METHOD - PIPES

The rational formula (Q=CIA) will be used basically in computing flows. The Town Engineer may require the use of the Soil Conservation Service methodology under certain conditions or situations where existing condition may warrant the use of a more conservative design. The following manuals will be used for determining pipe size and channel configuration:

A. Design Charts for open-channel flow Hydraulic Design Series No. 3 by Bureau of Public Roads, August 1961.

B. Hydraulic Charts for the selection of Highway Culverts. Hydraulic Engineering Circular No. 5 by Bureau of Public Roads, December 1965

C. Technical Release No. 55 Urban Hydrology for small Water Sheds Engineering Division, Soil Conservation Service U.S. Department of Agriculture June 1986

Storm sewer systems shall be designed to flow full but not under pressure, using the Manning Formula to determine the pipe size.

Special attention shall be given to the effect of submergence or free flow outlet condition in the design of outfall pipe. Measures shall be taken to maintain a maximum velocity of 5 feet per second for design flow.

All outlet structures shall be tested for erosion control.

Where the slope of pipe is less than 1 percent or there is evidence of a tailwater condition, backwater computations shall be included as part of the drainage submission.

## DESIGN METHODOLOGY - RETENTION BASINS

Small Sites and watershed area less than 200 acres - See Addendum "1" to this Appendix.

Watershed area greater than 200 acres - The Town Engineer will review existing field conditions and will establish design parameters on case by case basis. The minimum design criteria in any case will be the same as contained in Addendum "1" to this Appendix.

Watershed Greater than 200 Acres - The Town of Newington reserves the option to utilize the SCS methodology for estimating runoff for comparison with rational method.

## STORM SEWER DESIGN

All permanent storm sewer pipes installed within the public street right of way shall be concrete pipes unless specifically waived by the Town Engineer. The general exception to this policy will be:

A. Where ground conditions require use of an under-drain system.

B. Where slope of pipe will be ten (10) percent or greater.

C. Where facility may be considered temporary in nature.

D. Where facility is on private property and will remain private

Minimum size pipe allowed is twelve (12) inches in diameter.

Minimum grade of pipe shall provide a velocity of two (2) feet per second, where flowing 1/4 full.

Roughness Coefficient:

A. Reinforced concrete or ADS Pipe--

1. 15 inch through 30 inch --n=0.015.
2. 36 inch and larger----------n=0.013.

A. Asphalt coated corrugated metal pipe--

1. Unpaved invert----------n=0.024
2. Paved invert----------n=0.019
3. Smooth flow----------n=0.13

CATCH BASIS SPACING

A guide for installing catch basins shall consider the following as maximum spacing requirements:

A. Where road grade is 5% or less - 400 feet
B. Where road grade is 5% to 8% - 350 feet
C. Where road grade is greater than 8% - 300 feet

Field conditions may require the installation of modified or special catch basins, for example:

A. Low point area of street may require installation of a double grate structure.

B. Street slope or quantity of water may require the use of a double grate structure perpendicular to the curb line to eliminate by pass flow around structure.

Town Engineer reserves the right to require submission of gutter flow analysis.

Spacing of manhole structures shall be a function of field conditions and approved by Town Engineer.

All materials shall conform to Connecticut Development of Transportation's specifications.

All structures shall be constructed in accordance with Connecticut Department of Transportation's requirements.

## DITCHES and CHANNELS

All ditches and channels (bottom width two (2) feet or greater shall be analyzed as to type of treatment necessary based on flow, velocity, and grade, as follows:

1. Rip-Rap, 2. Paved, 3. Grass or natural ground.

DRAINAGE RIGHTS OF WAY FOR PIPE:

| Pipe Size | Minimum Width | Location of Centerline of Pipe or Ditch |
|---|---|---|
| Under 24" | 20 feet | 5' from either edge of drainage R.O.W. |
| 30" to 48" | 25 feet | 10' from either edge of drainage R.O.W. |
| 54' TO 72' | 35 feet | 15' from either edge of drainage R.O.W. |

NOTES:

A. A copy of the computations used in determining all pipe sizes shall be submitted to the Town Engineer on a form(s) supplied by the Town.

B. Engineer shall check capacity of existing down stream facilities as part of his/her analysis.

C. A drainage analysis map outlining drainage areas shall be submitted with the computations as follows:

1. When only local street drainage is involved, the contour map of the subdivision section will be adequate. If the submitted section is part of an overall system, then calculations and area map shall be submitted for the upstream area.

2. If a watercourse is involved, a contour map based on M.D.C. datum, scale 1" = 200', showing the tributary area and the effect on down stream properties shall be submitted.

D. Guidelines for soil erosion and sediment control prepared by the Council on Soil and Water Conservation and dated January 1985 shall be used in addressing designs and treatment of soil erosion and sediment related conditions.

Addendum

A. Design of Retention Systems for Small Work sheds

B. Storm Drainage Calculation and Design Form

C. Backwater Computation Form

ADDENDUM 1 TO: "APPENDIX B"
Town of Newington
Drainage Analysis and
Design Requirements

## DESIGN OF RETENTION SYSTEMS - SMALL SITES AND WATER SHEDS LESS THAN 30 ACRES

A. STORAGE CAPACITY

1. Surface - 25-year storm (difference between full development and existing conditions for routing calculation, and 100-year utilizing emergency spillway or overflow.

2. Subsurface – 25 year storm (difference between full development and existing conditions) unless waived by Town Engineer in writing.

B. MAXIMUM DISCHARGE THROUGH OUTLET

Capacity of existing downstream system up to a maximum for a 10-year storm based on existing conditions. (NOTE: On Major Water Courses or Brooks, the Town Engineer may approve a higher discharge.

C. CONTROL STRUCTURE

Must be designed to monitor the discharge of lower frequency storms (NOTE: For example; 1-year, 2-year, 5-year, etc.)

D. Engineer must determine which storm (utilizing the rational formula within the parameters of design presents the controlling effect on downstream facilities and properties. (NOTE: For example: within a small watershed, a storm of longer duration may control over the peak discharge storm.)

E. The triangular type hydrographs, shown below, shall be used in developing flows for the design storm:

1. PEAK STORM

$T_c$ = Time of Concentration

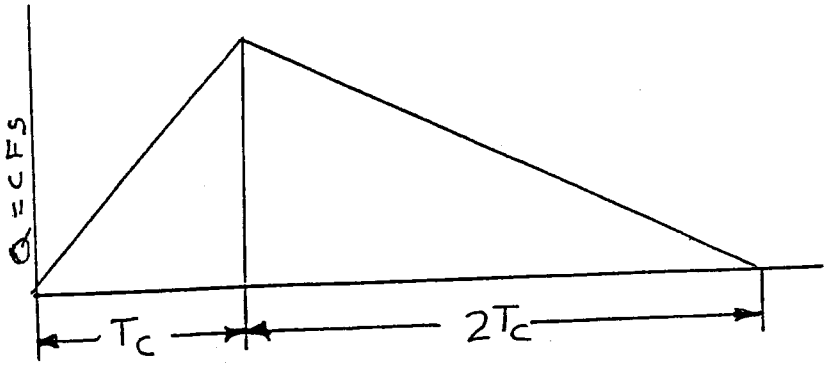

$T_c$ = Time of Concentration
$T_D$ = Time Span of Storm Under Analysis.

2. DURATION TYPE STORM

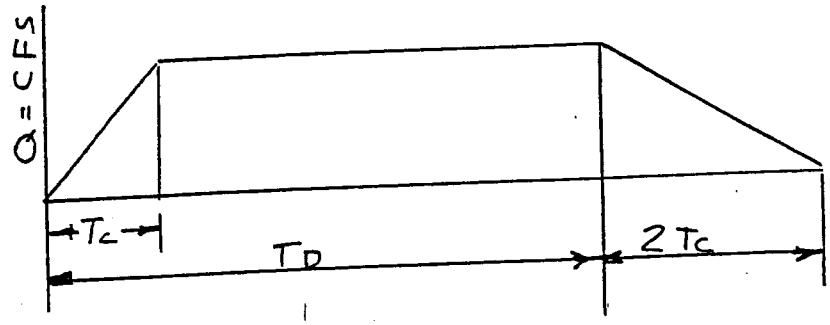


F. ROUTING CALCULATIONS

Method and Format shall be submitted to Town Engineer for approval.

DESIGN OF DETENTION SYSTEMS FOR SMALL SITES On site storage and leaching utilizing the absorption qualities of existing ground-25 year where no outlet exists.

A. A design of lesser frequency (10 year) may be considered where access exists to a public street either by direct pipe connection to a street system or over land flow within the property to a public street.

B. Engineer must determine which storm utilizing the rational formula within the parameters of design presents the controlling condition. Storm Conditions may exist where volume of run-off may control over peak discharge. Therefore, storage capacity of the system can become a critical factor depending on the absorption quality of the ground.

C. Town Engineer shall approve method/procedure to be used for calculating underground storage capacity required for system.

D. Test pits shall be excavated to a depth where the proposed system is to be installed. Perculation tests shall be conducted by the Engineer in accordance with accepted procedures. Effective permeability of the soil shall be assessed as follows:

1. Two (2) test pits - lower of two results,

2. Four (4) or more pits - eliminate the high and low; use average of remaining results.

   NOTE: Time of year is critical in determining the elevation of the water table. Tests should be done either in the spring or fall.

E. All catch basins discharging into the system shall have trapped outlets with three (3) foot sumps.

Design for the above Retention and Detention Systems shall incorporate provision(s) for emergency relief or by-pass to accommodate excess flows. This provision insures that no major or adverse impact will occur to property within the immediate area of the system.

# APPENDIX B

## COMPUTATION FORMS AND AIDS

# TOWN OF NEWINGTON
## STORM DRAINAGE COMPUTATIONS

LOCATION _____ Q = CIA DESIGN FREQUENCY _____ YRS.

PREPARED BY _____ DATE _____ SHEET _____ OF _____ SHEETS

CHECKED BY _____ DATE _____

| REMARKS | LOCATION | | AREA | | | | TIME OF FLOW (MINUTES) | | | DESIGN | | | | | | PROFILE | | | MISCELLANEOUS | | | |
|---|---|---|---|---|---|---|---|---|---|---|---|---|---|---|---|---|---|---|---|---|---|---|
| | FROM INLET | TO INLET | TRIBUTARY AREA (ACRES) | RUN-OFF COEFFICIENT | EQUIVALENT (100%) ACRES | CUMULATIVE (100%) ACRES | TO UPPER END | IN SECTION | ACCUMULATED TOTAL | RAINFALL INTENSITY (INCHES PER HOUR) | RUN-OFF (C.F.S.) | SLOPE (FT. PER 100 FT.) | DIAMETER OF PIPE (INCHES) | CAPACITY OF PIPE FULL (C.F.S.) | VELOCITY OF PIPE FULL (FT. PER SEC.) | INVERT ELEVATION UPPER END | INVERT ELEVATION LOWER END | SECTION LENGTH (FT.) | | | | |

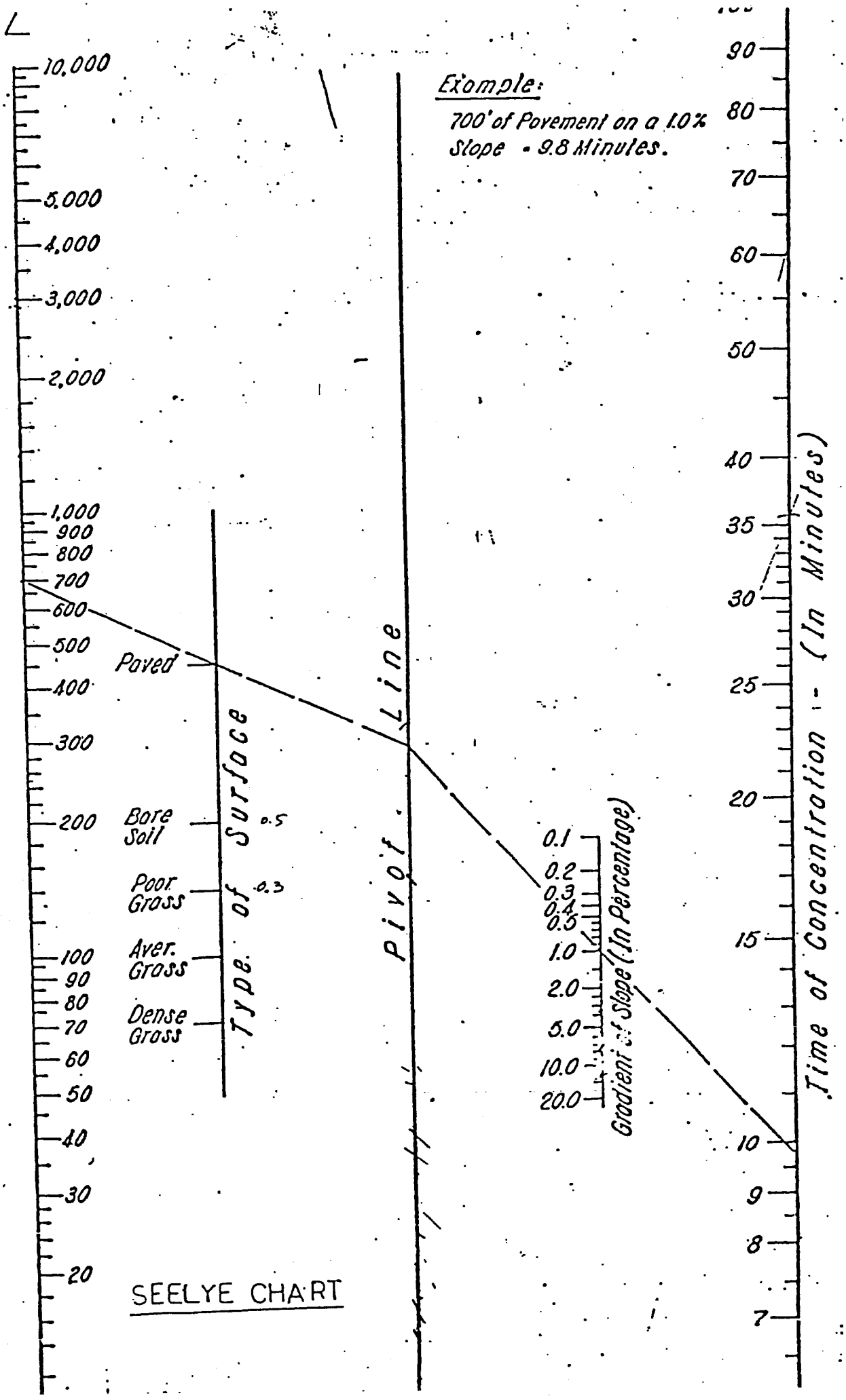


SEELYE CHART

RAINFALL FREQUENCY VALUES FOR CT-RI
With 24-Hr. Storm Duration

Inches of Rainfall

| FREQUENCY | 1-YR. | 2-YR. | 5-YR. | 10-YR. | 25-YR. | 50-YR. | 100-YR. |
|---|---|---|---|---|---|---|---|
| Connecticut | | | | | | | |
| Fairfield | 2.7 | 3.3 | 4.3 | 5.0 | 5.7 | 6.4 | 7.2 |
| Hartford | 2.6 | 3.2 | 4.1 | 4.7 | 5.5 | 6.2 | 6.9 |
| Litchfield | 2.6 | 3.2 | 4.1 | 4.7 | 5.5 | 6.2 | 7.0 |
| Middlesex | 2.7 | 3.3 | 4.2 | 5.0 | 5.0 | 6.3 | 7.1 |
| New Haven | 2.7 | 3.3 | 4.2 | 5.0 | 5.6 | 6.3 | 7.1 |
| New London | 2.7 | 3.4 | 4.3 | 5.0 | 5.7 | 6.3 | 7.1 |
| Tolland | 2.6 | 3.2 | 4.1 | 4.8 | 5.5 | 6.2 | 6.9 |
| Windham | 2.6 | 3.2 | 4.2 | 4.8 | 5.5 | 6.2 | 6.9 |
| Rhode Island | | | | | | | |
| Northern | 2.7 | 3.3 | 4.2 | 4.8 | 5.6 | 6.2 | 7.0 |
| Eastern | 2.7 | 3.4 | 4.3 | 4.9 | 5.7 | 6.3 | 7.1 |
| Southern | 2.7 | 3.4 | 4.4 | 5.0 | 5.8 | 6.4 | 7.2 |

Reference: U.S. Department of Commerce and Weather Bureau
T.P. 40, May 1961

EXHIBIT 2-3.1 CT-RI

# RAINFALL INTENSITY CHART IN INCHES PER HOUR
## HARTFORD, CONN. R

DURATION IN MINUTES

| Return Period (Years) | 5 | 6 | 7 | 8 | 9 | 10 | 11 | 12 | 13 | 14 | 15 | 16 | 17 | 18 | 19 | 20 | 21 | 22 | 23 | 24 | 25 | 26 | 27 | 28 | 29 | 30 | 31 | 3 |
|---|---|---|---|---|---|---|---|---|---|---|---|---|---|---|---|---|---|---|---|---|---|---|---|---|---|---|---|---|
| 10 | 6.2 | 5.6 | 5.4 | 5.3 | 5.0 | 4.7 | 4.5 | 4.4 | 4.3 | 4.1 | 4.0 | 3.9 | 3.8 | 3.7 | 3.5 | 3.4 | 3.3 | [illegible] | [illegible] | 3.2 | 3.1 | 3.0 | 2.9 | 2.9 | 2.8 | 2.7 | 2.6 | 2. |
| 25 | 7.1 | 6.7 | 6.4 | 6.1 | 5.7 | 5.6 | 5.4 | 5.2 | 5.0 | 4.9 | 4.7 | 4.5 | 4.4 | 4.3 | 4.2 | 4.1 | 4.0 | 4.0 | 3.9 | 3.8 | 3.7 | 3.6 | 3.5 | 3.5 | 3.4 | 3.3 | 3.2 | 3. |
| 50 | 7.7 | 7.4 | 7.0 | 6.7 | 6.5 | 6.1 | 6.0 | 5.8 | 5.6 | 5.4 | 5.2 | 5.1 | 5.0 | 4.9 | 4.7 | 4.6 | 4.5 | 4.4 | 4.3 | 4.3 | 4.2 | 4.1 | 4.0 | 3.9 | 3.8 | 3.7 | 3.6 | 3. |

DURATION IN MINUTES

| Return Period (Years) | 33 | 34 | 35 | 36 | 37 | 38 | 39 | 40 | 41 | 42 | 43 | 44 | 45 | 46 | 47 | 48 | 49 | 50 | 51 | 52 | 53 | 54 | 55 | 56 | 57 | 58 | 59 | 6 |
|---|---|---|---|---|---|---|---|---|---|---|---|---|---|---|---|---|---|---|---|---|---|---|---|---|---|---|---|---|
| 10 | 2.6 | 2.5 | 2.5 | 2.5 | 2.4 | 2.4 | 2.3 | 2.3 | 2.3 | 2.2 | 2.2 | 2.1 | 2.1 | 2.1 | 2.0 | 2.0 | 2.0 | 2.0 | 1.9 | 1.9 | 1.9 | 1.9 | 1.8 | 1.8 | 1.8 | 1.8 | 1.8 | 1. |
| 25 | 3.1 | 3.1 | 3.0 | 3.0 | 2.9 | 2.9 | 2.8 | 2.8 | 2.7 | 2.6 | 2.5 | 2.5 | 2.5 | 2.5 | 2.4 | 2.4 | 2.4 | 2.4 | 2.3 | 2.3 | 2.2 | 2.2 | 2.2 | 2.2 | 2.2 | 2.1 | 2.1 | 2 |
| 50 | 3.5 | 3.4 | 3.3 | 3.3 | 3.2 | 3.2 | 3.1 | 3.1 | 3.0 | 3.0 | 2.9 | 2.9 | 2.8 | 2.8 | 2.8 | 2.7 | 2.7 | 2.7 | 2.6 | 2.6 | 2.5 | 2.5 | 2.4 | 2.4 | 2.4 | 2.4 | 2.4 | 2 |

# WATER SURFACE ANALYSIS

PROJECT _____ TOWN _____ ROUTE _____

DESIGNED BY _____ DATE _____ CHECKED BY _____ DATE _____ SH. NO. _____

STA. _____ OFFSET _____

OFFSET _____

OUTLET STA. _____

OUTLET T.W. EL. _____

OUTLET EL. _____

Q = _____ EL. _____ EL. _____

LENGTH _____

SLOPE _____

STA. _____ OFFSET _____

STRUCTURE TYPE _____

TOP OF GRATE ELEV. _____

DESIGN W.S. ELEV. _____

MATCH "A" MARK

Q = _____ EL. _____ EL. _____

LENGTH _____

SLOPE _____

| SIZE | | INLET CONTROL | | OUTLET CONTROL | | | | | | | HW = H + $h_o$ − LS$_o$ | Control HW | SIZE | | INLET CONTROL | | OUTLET CONTROL | | | | | | | HW = H + $h_o$ − LS$_o$ | Control HW |
|---|---|---|---|---|---|---|---|---|---|---|---|---|---|---|---|---|---|---|---|---|---|---|---|---|---|
| TYPE | n | $\frac{HW}{D}$ | HW | $K_e$ | H | $d_c$ | $\frac{d_c+D}{2}$ | TW | $h_o$ | LS | HW | | TYPE | n | $\frac{HW}{D}$ | HW | $K_e$ | H | $d_c$ | $\frac{d_c+D}{2}$ | TW | $h_o$ | LS | HW | |
| | | | | | | | | | | | | | | | | | | | | | | | | | |
| | | | | | | | | | | | | | | | | | | | | | | | | | |
| | | | | | | | | | | | | | | | | | | | | | | | | | |
| | | | | | | | | | | | | | | | | | | | | | | | | | |
| | | | | | | | | | | | | | | | | | | | | | | | | | |

STA. _____ OFFSET _____

OFFSET _____

MATCH "A" MARK

Q = _____ EL. _____ EL. _____

LENGTH _____

SLOPE _____

STA. _____ OFFSET _____

STRUCTURE TYPE _____

TOP OF GRATE ELEV. _____

DESIGN W.S. ELEV. _____

Q = _____ EL. _____ EL. _____

LENGTH _____

SLOPE _____

| SIZE | | INLET CONTROL | | OUTLET CONTROL | | | | | | | HW = H + $h_o$ − LS$_o$ | Control HW | SIZE | | INLET CONTROL | | OUTLET CONTROL | | | | | | | HW = H + $h_o$ − LS$_o$ | Control HW |
|---|---|---|---|---|---|---|---|---|---|---|---|---|---|---|---|---|---|---|---|---|---|---|---|---|---|
| TYPE | n | $\frac{HW}{D}$ | HW | $K_e$ | H | $d_c$ | $\frac{d_c+D}{2}$ | TW | $h_o$ | LS | HW | | TYPE | n | $\frac{HW}{D}$ | HW | $K_e$ | H | $d_c$ | $\frac{d_c+D}{2}$ | TW | $h_o$ | LS | HW | |
| | | | | | | | | | | | | | | | | | | | | | | | | | |
| | | | | | | | | | | | | | | | | | | | | | | | | | |
| | | | | | | | | | | | | | | | | | | | | | | | | | |
| | | | | | | | | | | | | | | | | | | | | | | | | | |
| | | | | | | | | | | | | | | | | | | | | | | | | | |

PROJECT: _____
TOWN: _____
ROUTE: _____

# CULVERT COMPUTATIONS

PREPARED BY: _____
CHECKED BY: _____
DATE: _____

## HYDROLOGIC AND CHANNEL INFORMATION

$Q_1$ = _____ $TW_1$ = _____
$Q_2$ = _____ $TW_2$ = _____

$Q_1$ = DESIGN DISCHARGE, FREQ. = _____ YR.
$Q_2$ = CHECK DISCHARGE, FREQ. = _____ YR.

## SKETCH

STATION: _____

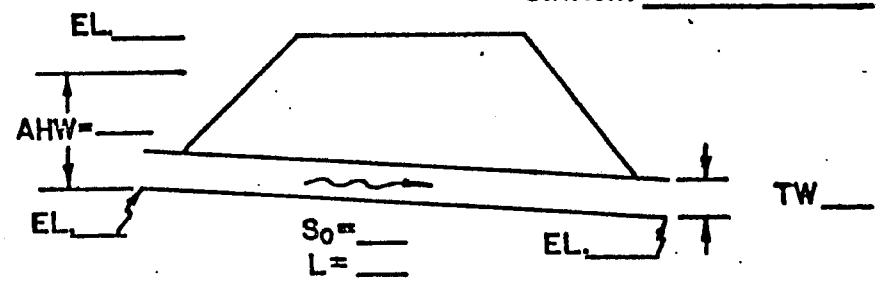


MEAN STREAM VELOCITY = _____
MAX. STREAM VELOCITY = _____

| CULVERT DESCRIPTION (ENTRANCE TYPE) | Q | SIZE | HEADWATER COMPUTATION | | | | | | | | | CONTROLLING HW | OUTLET VELOCITY | COST | COMMENTS |
|---|---|---|---|---|---|---|---|---|---|---|---|---|---|---|---|
| | | | INLET CONT. | | OUTLET CONTROL $HW = H + h_o - LS_o$ | | | | | | | | | | |
| | | | $\frac{HW}{D}$ | HW | $K_e$ | H | $d_c$ | $\frac{d_c+D}{2}$ | TW | $h_o$ | HW | | | | |
| | | | | | | | | | | | | | | | |
| | | | | | | | | | | | | | | | |
| | | | | | | | | | | | | | | | |
| | | | | | | | | | | | | | | | |
| | | | | | | | | | | | | | | | |
| | | | | | | | | | | | | | | | |
| | | | | | | | | | | | | | | | |

SUMMARY & RECOMMENDATIONS:

Project _____ Designed by _____

Town _____ Route _____ Checked by _____

Sheet No.

| | | | | | | | | | | | | | | | | | | | | | | | |
|---|---|---|---|---|---|---|---|---|---|---|---|---|---|---|---|---|---|---|---|---|---|---|---|
| Inlet Number | 1 | | | | | | | | | | | | | | | | | | | | | | |
| Time to Inlet | 2 | | | | | | | | | | | | | | | | | | | | | | |
| Area in Acres | 3 | | | | | | | | | | | | | | | | | | | | | | |
| Runoff Coefficient | 4 | | | | | | | | | | | | | | | | | | | | | | |
| AI | 5 | | | | | | | | | | | | | | | | | | | | | | |
| Sum of AI | 6 | | | | | | | | | | | | | | | | | | | | | | |
| Total AI | 7 | | | | | | | | | | | | | | | | | | | | | | |
| Rainfall Intensity | 8 | | | | | | | | | | | | | | | | | | | | | | |
| Q to Inlet | 9 | | | | | | | | | | | | | | | | | | | | | | |
| Grade of Gutter | 10 | | | | | | | | | | | | | | | | | | | | | | |
| Cross Slope of Shoulder | 11 | | | | | | | | | | | | | | | | | | | | | | |
| Depth of Flow at Gutter | 12 | | | | | | | | | | | | | | | | | | | | | | |
| Width of Flow | 13 | | | | | | | | | | | | | | | | | | | | | | |
| Q Bypassing Inlet | 14 | | | | | | | | | | | | | | | | | | | | | | |
| AI Bypassing Inlet | 15 | | | | | | | | | | | | | | | | | | | | | | |
| AI Entering Catch Basin | 16 | | | | | | | | | | | | | | | | | | | | | | |

Connecticut Bureau of Highways

Gutter Flow Analysis

Attach No. _____ Sheet 5 of 7

# APPENDIX C

## TYPICAL BEST MANAGEMENT MEASURES

The management measures used to minimize runoff volumes and to control peak rates of runoff should be appropriate for the size and type of watershed involved. The overall goals are to minimize runoff volume (limit impervious cover, encourage infiltration, disperse runoff, etc.) and to control peak flow rates (preserve natural watercourses, delay runoff, store excess runoff, etc.). The table below outlines some of the specific measures available.

## RUNOFF FLOW RATE CONTROLS

| On-Site | Small Watersheds | Large Watersheds |
|---|---|---|
| Minimize Impervious Cover | Save Wetlands | |
| Disperse Roof Runoff | Preserve Watercourses | Floodplain Storage |
| Disconnect Impervious Areas from Storm Drains | Protect Riparian Buffers | Channel Encroachment Limits |
| Minimize Curbs | Delay Runoff | Flood Control Dams |
| Use Dry Wells for Rooftop Runoff | Detention Basins | Minimize Channelization |
| Use Grass Channels | Retention Basins | Use Floodway Systems |
| Preserve Depressions | Wet Ponds | Control Velocities |
| Preserve Wetlands | Infiltration Systems | Restore Degraded Channels |
| Encourage Sheet Flow | Minimize Pipes, Conduits | Floodwater Diversions |
| Utilize Vegetative Filters | Wetland Storage | |
| Level Spreaders | Swale Check Dams | |
| Save Existing Trees | Increase Flow Path Lengths | |
| Use Pervious Pavements | Increase Roughness "N" | |

j18smg-jea.doc

Stormwater runoff should be managed to avoid sources of pollution and treat it to remove excess pollutants. The first steps are to minimize the volume of runoff (see Appendix C), and to control pollutants at their source. The secondary and tertiary type of measures treat the runoff after it has been exposed to pollutants. Typical management measures are listed below.

## RUNOFF QUALITY CONTROLS

| Source Controls | Primary Measures | Secondary Measures | Tertiary Measures |
|---|---|---|---|
| Litter Control | Grass Filter Strips | Grass Swales | Outlet Protection |
| Minimize Disturbance | Silt Fence | Sediment Chambers | Aeration |
| Avoid Steep Slopes | Haybales | Recharge Basins | Sand Filters |
| Apply Mulch | Catch Basin Sumps | Sediment Basins | Peat Filters |
| Hydro Seed or Sod | Hooded Outlets | Retention Basins | Chemical Treatment |
| Cover Stockpiles | Bag Filters | Check Dams | Artificial Wetlands |
| Save Existing Trees | Sheet Flow | Bio Filters | Cartridge Filters |
| Street Sweeping | Vegetated Shoulders | Vegetated Buffers | Vegetative Filters |
| Limit Fertilizer | Oil & Grease Traps | Swirl Concentrators | |
| Spill Cleanup | Minimize Curbs | Wet Ponds | |

j18smg-jea.doc

# APPENDIX D

## TYPICAL DETAILS

TYPICAL SECTION
ADS PIPE, CONCRETE OR METAL PIPE

| TOWN OF NEWINGTON | TYPICAL STORM DRAIN TRENCH ADS PIPE UNDERDRAIN | |
|---|---|---|
| REVISIONS | | Not to Scale |
| No. / Description / Date / Approved | | |
| Drawn By: H.J.R. | Checked By: R.M.A. | |
| Date: | File: | |

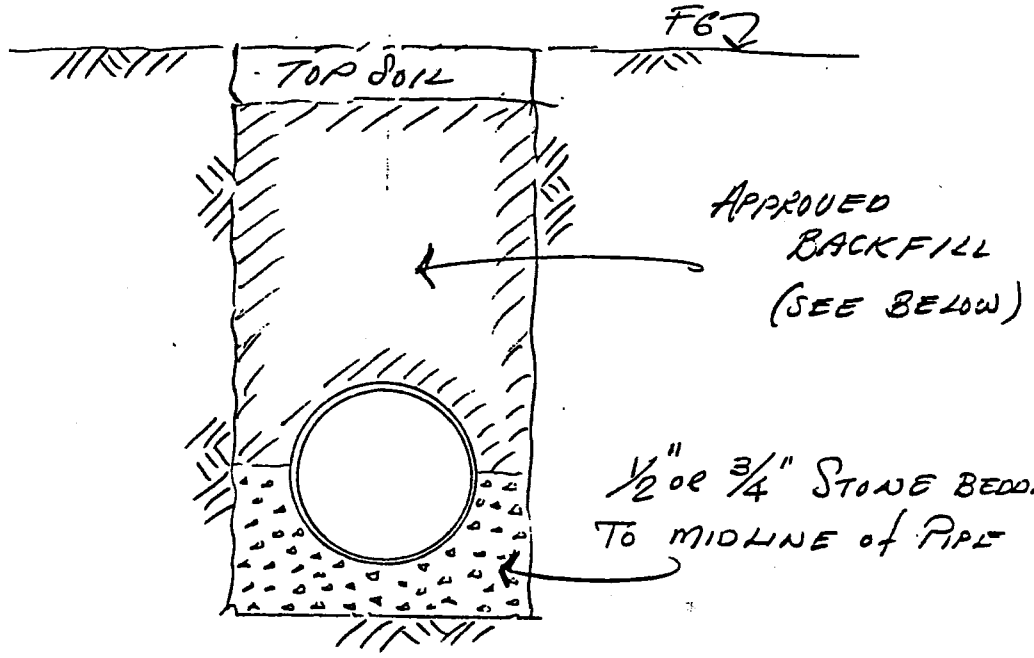


REG ADS SMOOTHFLOW N-12

"O"RING RCP
ALUMINUM OR ASPHALT COATED CORREGATED METAL P

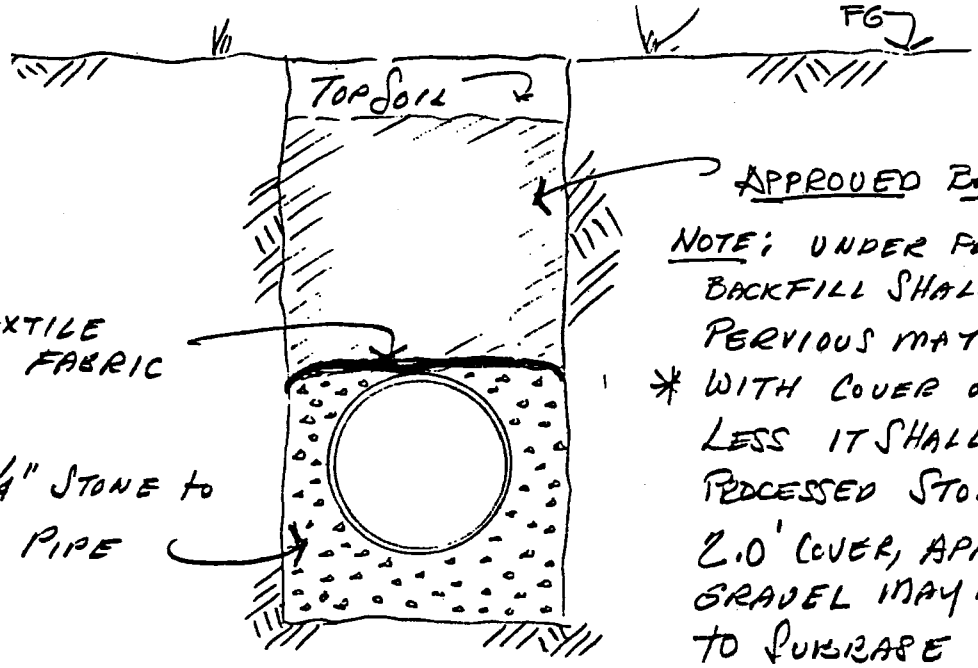


NOTE: UNDER PAVEMENT BACKFILL SHALL BE PERVIOUS MATERIAL,
* WITH COVER of 2.0' OR LESS IT SHALL BE PROCESSED STONE, OVE 2.0' COVER, APPROVED GRAVEL MAY BE USE TO SUBBASE of ROADW

UNDERDRAIN
PERFERATED ADS SMOOTHFLOW N-12

# TOWN of NEWINGTON

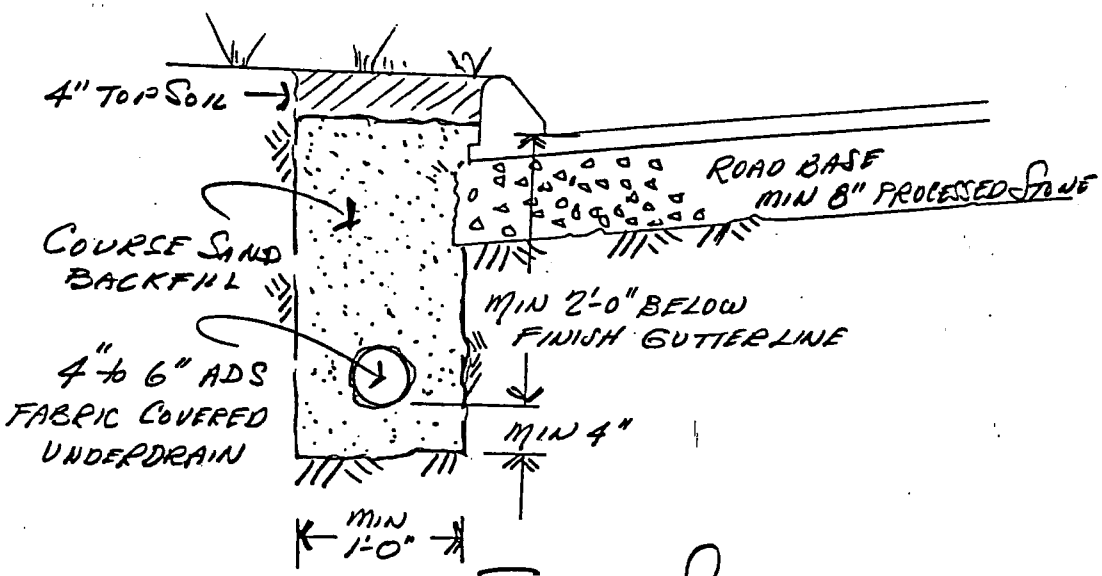


TYPICAL SECTION *NOT TO SCALE

FLEXABLE FABRIC COVERED UNDERDRAIN (SAND BACKFILL)

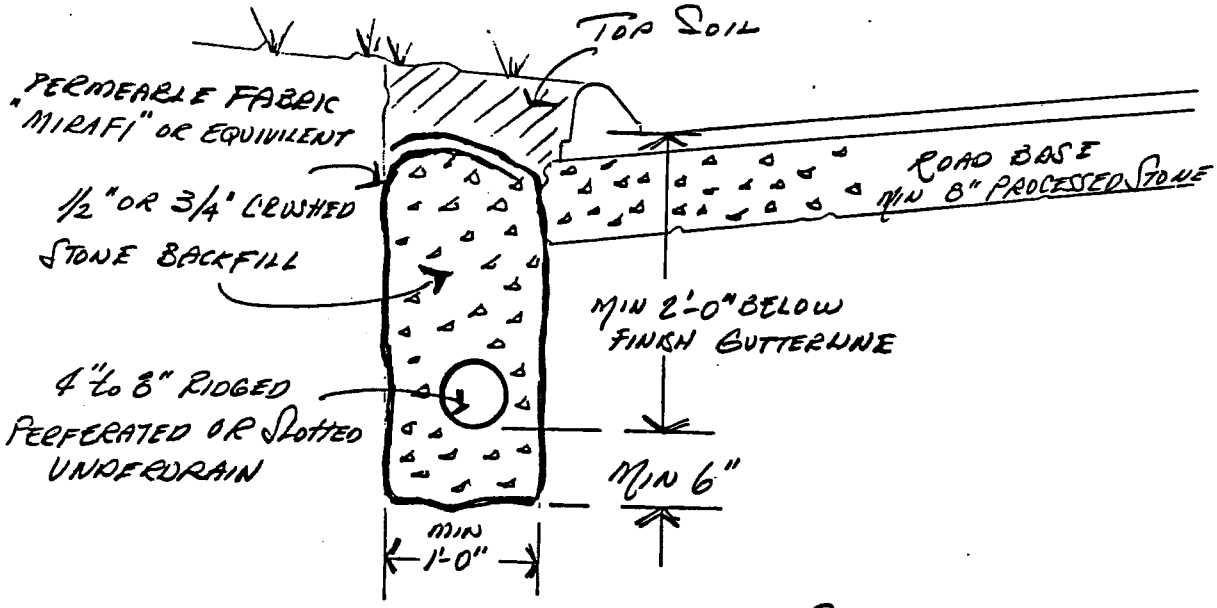


TYPICAL SECTION *NOT TO SCALE

RIDGED PERFERATED OR SLOTTED UNDERDRAIN (STONE BACKFILL)

TOWN OF NEWINGTON

TYPICAL UNDERDRAIN DETAILS

| REVISIONS | | | |
|---|---|---|---|
| No. | Description | Date | Approved |

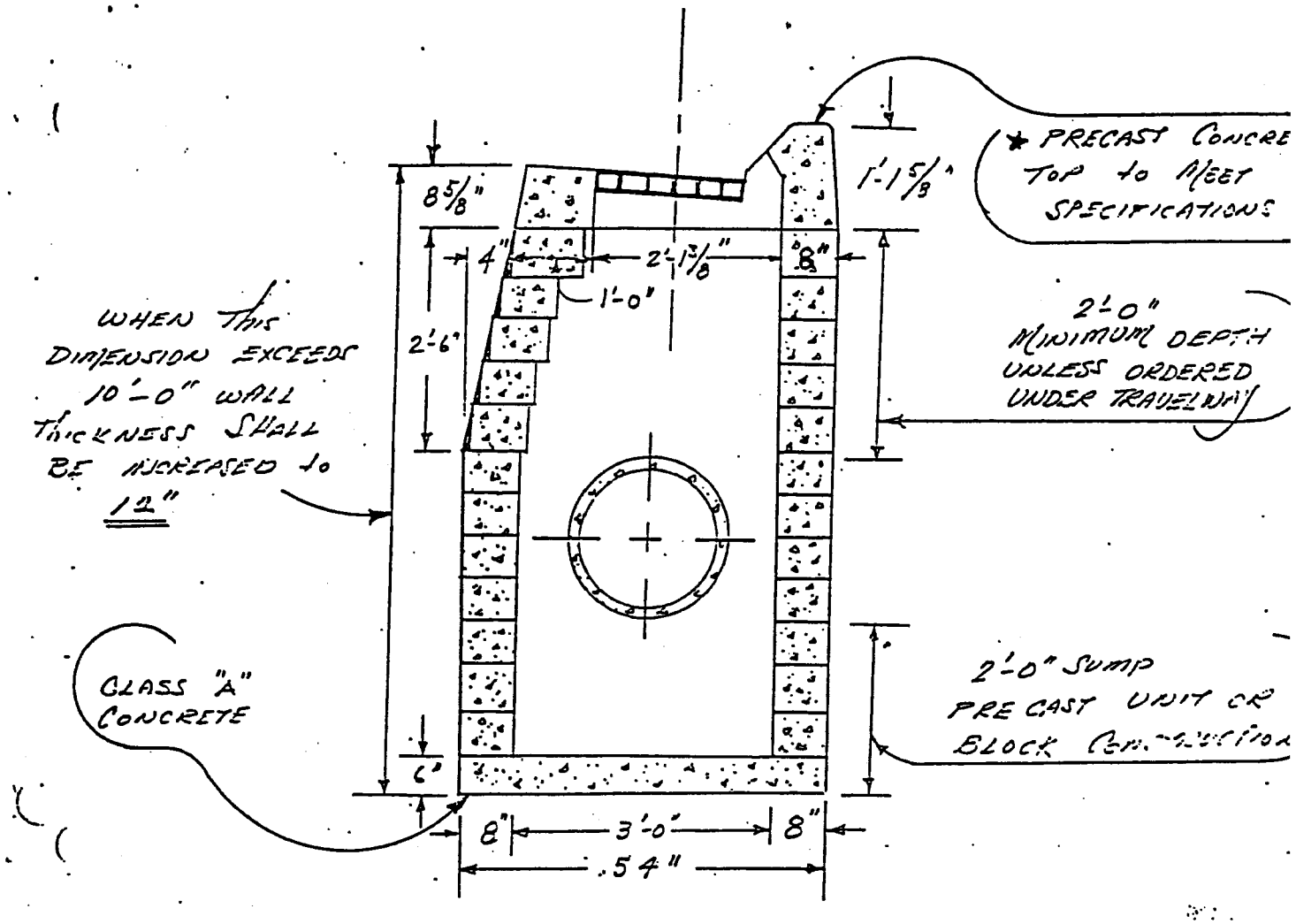


NOTE: ALL INTERIOR WALLS OF CATCH BASIN WILL BE FACED, POINTED, AND GROUTED WITH MORTAR.

* TOWN OF WINDSOR TYPE WITH 3/8 INCH PER FOOT CROSS SLOPE

TOWN OF NEWINGTON

TYPICAL

TYPE "C" CATCH BASIN BLOCK CONSTRUCTION

| REVISIONS | | | |
|---|---|---|---|
| No. | Description | Date | Approved |
| | | | |
| | | | |
| | | | |
| Drawn By: H.J.P. | | Checked By: P.M.A | |
| Date: | | File: plate | |

Not to Scale

PLATE

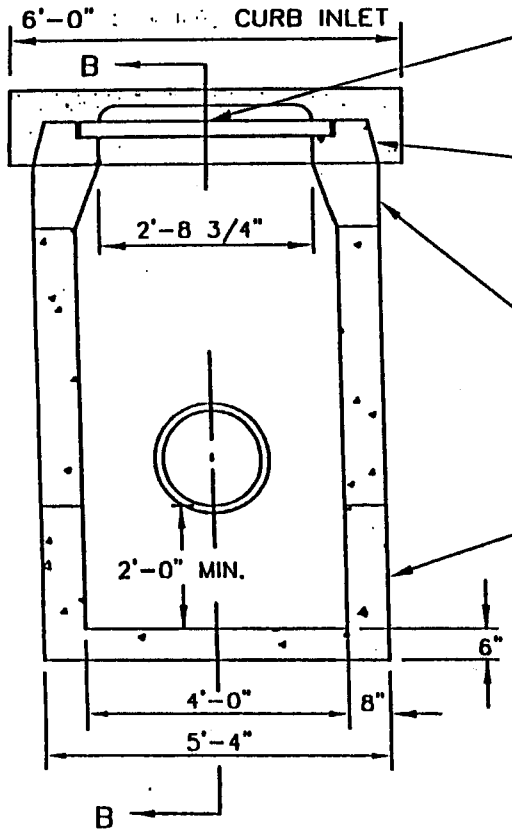


SECTION A-A

STEEL FRAME AND GRATE
SEE PLATE #19

PRECAST CONCRETE C.B.
TOP FOR GRANITE CURB
SEE PLATE #16

PRECAST CONCRETE ADAPTER
OR CONCRETE BLOCK
(SEE NOTE #1)

POURED IN PLACE CLASS "A"
CONCRETE OR PRECAST
CONCRETE SUMP

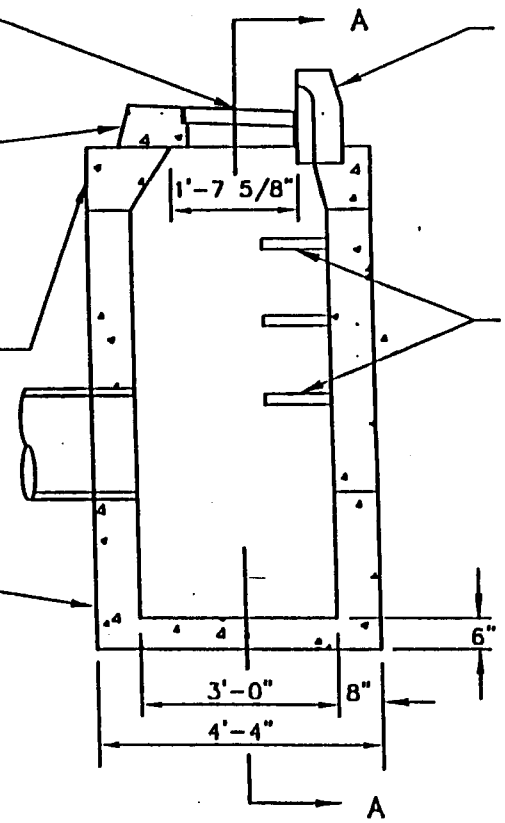


SECTION B-B

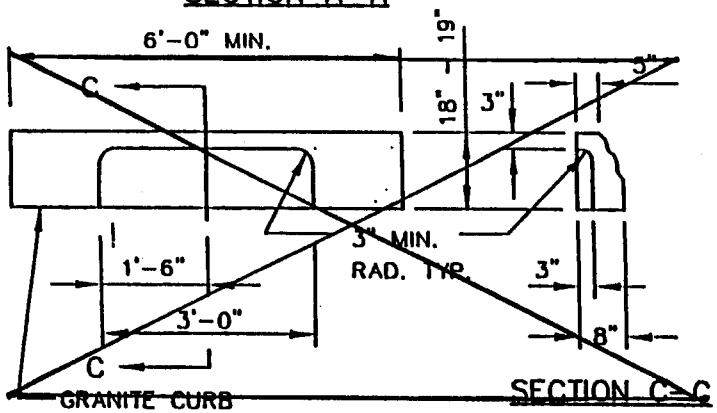


GRANITE CURB INLET

NOTES:

1. WHEN CONC. BLOCKS USED, MAX. CORBEL OF 2" PER COURSE OF BLOCK.
2. WALLS - CONC. BLOCK OR PRECAST SECTIONS.
3. WALL THICKNESS TO BE 12" WHEN TOTAL HEIGHT OF STRUCTURE EXCEEDS 10' FROM T.F. TO BOTTOM OF BASE.

| REVISIONS | | | |
|---|---|---|---|
| No. | Description | Date | Approved |
| | | | |
| | | | |
| | | | |

Drawn By: | Checked By:

TOWN OF NEWINGTON

TYPICAL

TYPE "C" CATCH BASIN

PLATE

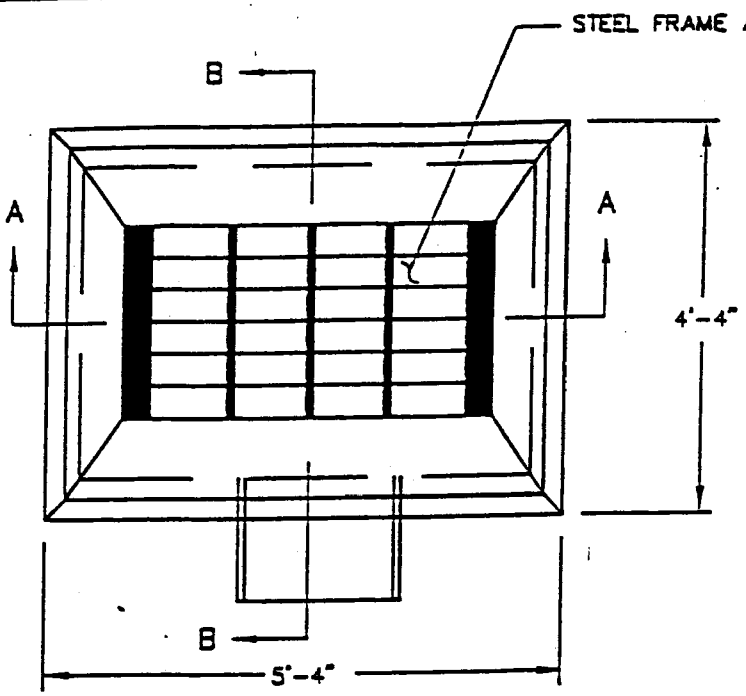


PLAN

NOTES:

1. STANDARD MANHOLE STEPS IN STRUCTURES OVER 4'-0" DEEP SPACED AT 1'-3".
2. WALLS CONC. BLOCK OR PRECAST CONC. SECTIONS.
3. WALL THICKNESS TO BE 12" WHEN TOTAL HEIGHT OF STRUCTURE EXCEEDS 10'-0" FROM T.F. TO BOTTOM OF BASE. INSIDE DIMENSIONS TO REMAIN THE SAME.

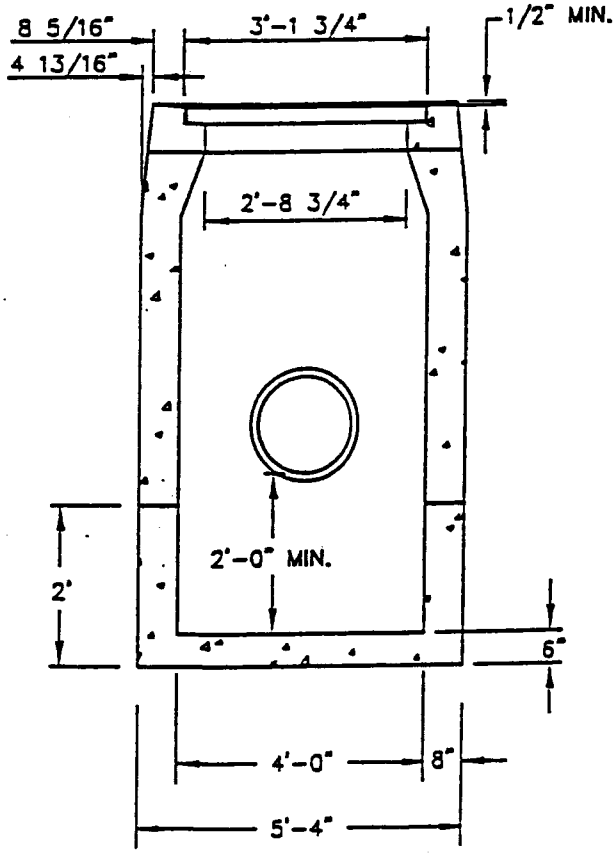


SECTION A–A

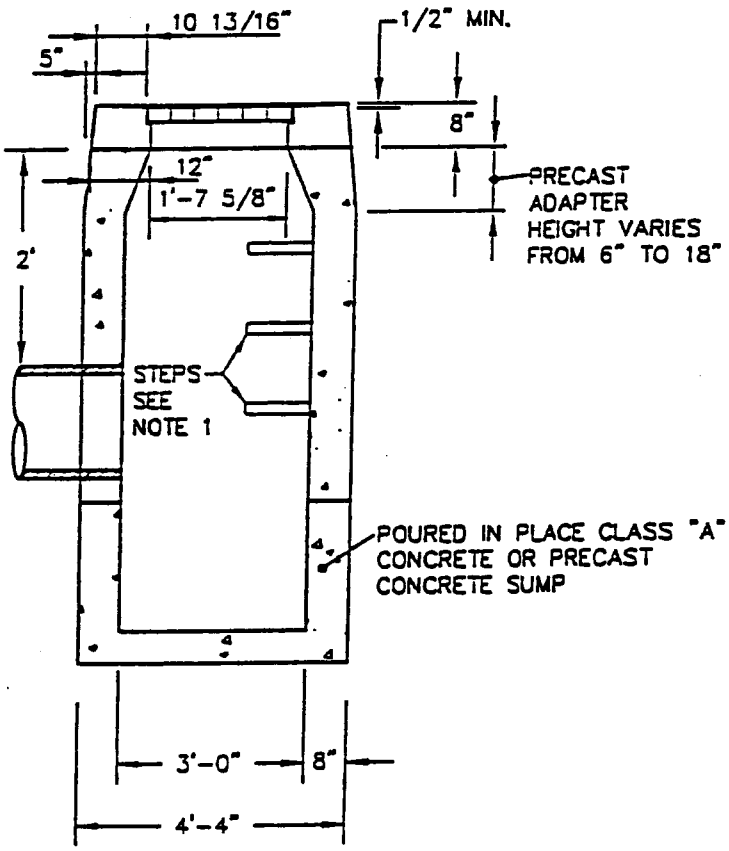


SECTION B–B

TOWN OF NEWINGTON

TYPICAL

TYPE "C–L" CATCH BASIN

| REVISIONS | | | |
|---|---|---|---|
| No. | Description | Date | Approved |
| | | | |
| | | | |
| | | | |
| Drawn By: | | Checked By: | |
| Date: | | File: plate | |

Not to Scale

PLATE

NOTES:

1. ALL MANHOLE FRAMES COVERS TO BE SET FLUSH WITH BINDER COURSE. A MANHOLE RISER RING (PLATE #20) SHALL BE USED TO BRING MANHOLE COVER TO FINISHED GRADE PRIOR TO THE COMPLETION OF THE FINAL SURFACE COURSE.

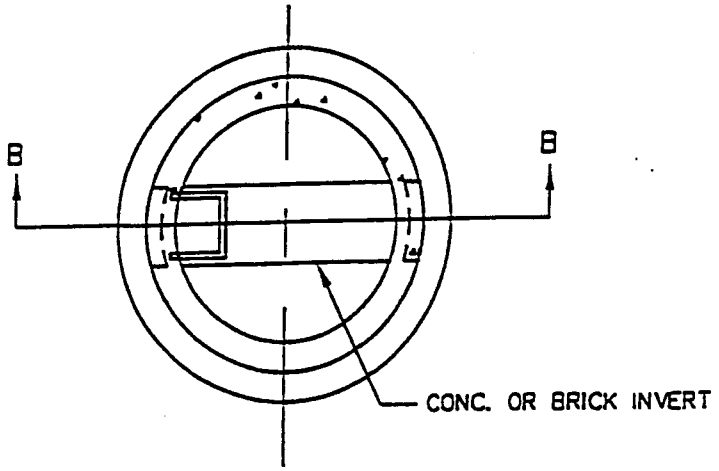


CROSS SECTION "A–A"

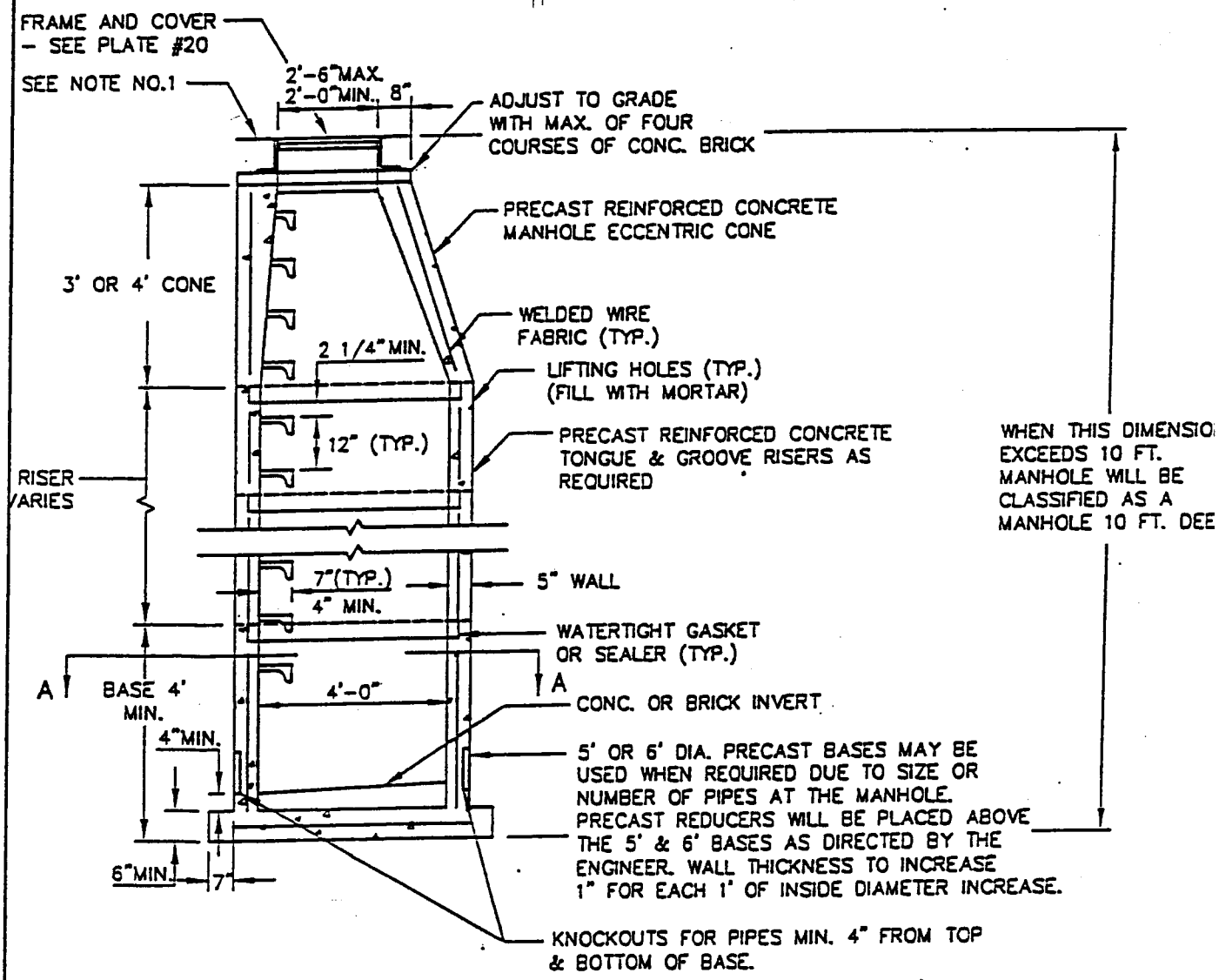


MANHOLE VERTICAL SECTION "B–B"

TOWN OF NEWINGTON

TYPICAL

STORM DRAIN MANHOLE – PRECAST CONCRETE UNITS

| REVISIONS | | | |
|---|---|---|---|
| No. | Description | Date | Approved |
| | | | |
| | | | |
| | | | |
| Drawn By: | | Checked By: | |
| Date: | | File: plate | |

Not to Scale

PLATE

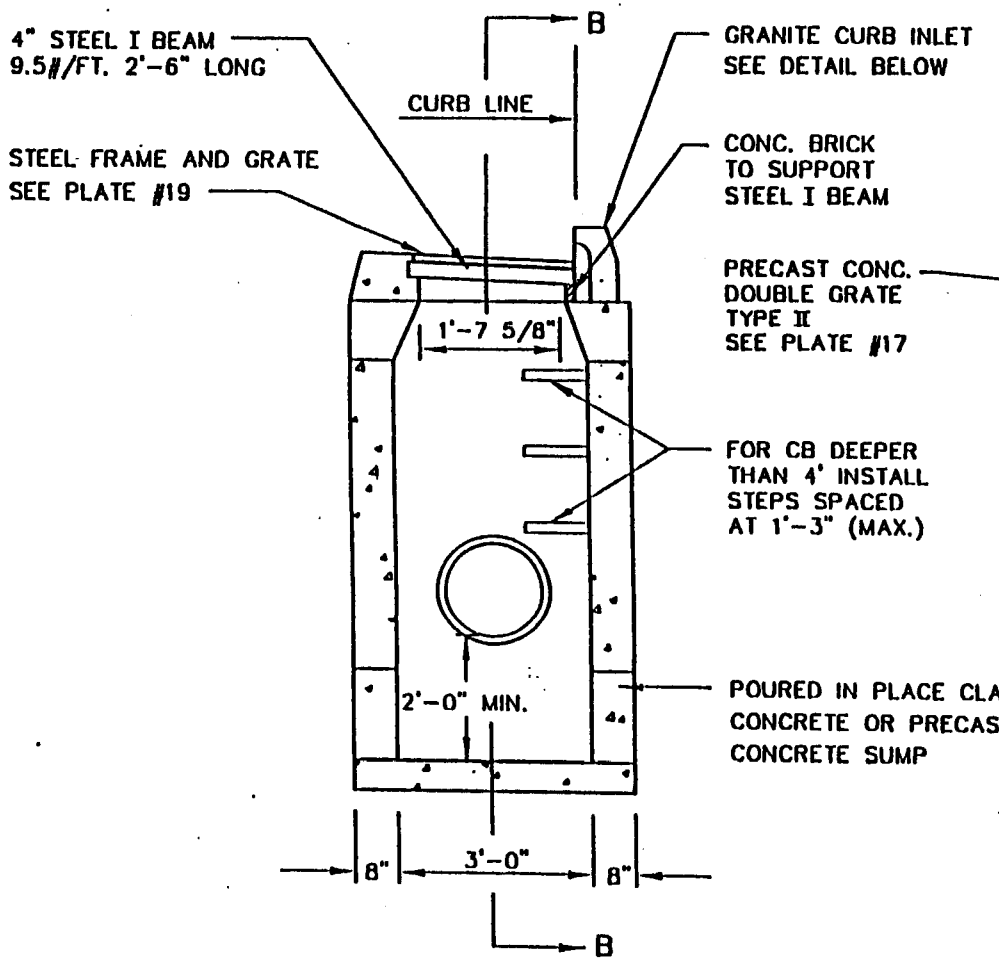


SECTION A-A

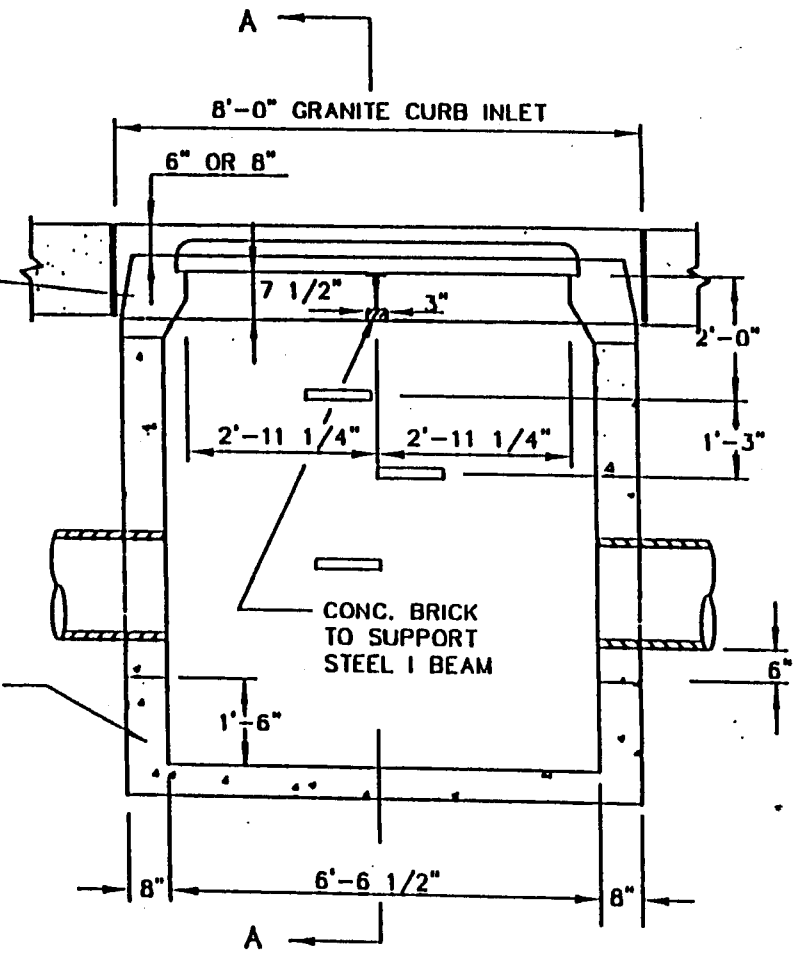


SECTION B-B

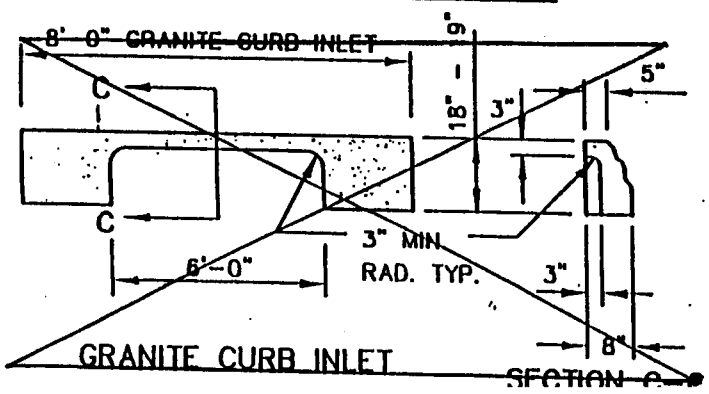


NOTES:

1. WALLS - CONC. BLOCK OR PRECAST SECTIONS.
2. SET GRANITE CURB IN CEMENT MORTAR.
3. WALL THICKNESS TO BE 12" WHEN TOTAL HEIGHT OF STRUCTURE EXCEEDS 10' FROM T.F. TO BOTTOM OF BASE.

| REVISIONS | | | |
|---|---|---|---|
| No. | Description | Date | Approved |
| | | | |
| | | | |
| | | | |
| Drawn By: | | Checked By: | |

TOWN OF NEWINGTON

TYPICAL
TYPE "C" CATCH BASIN -
DOUBLE GRATE TYPE II

PLATE

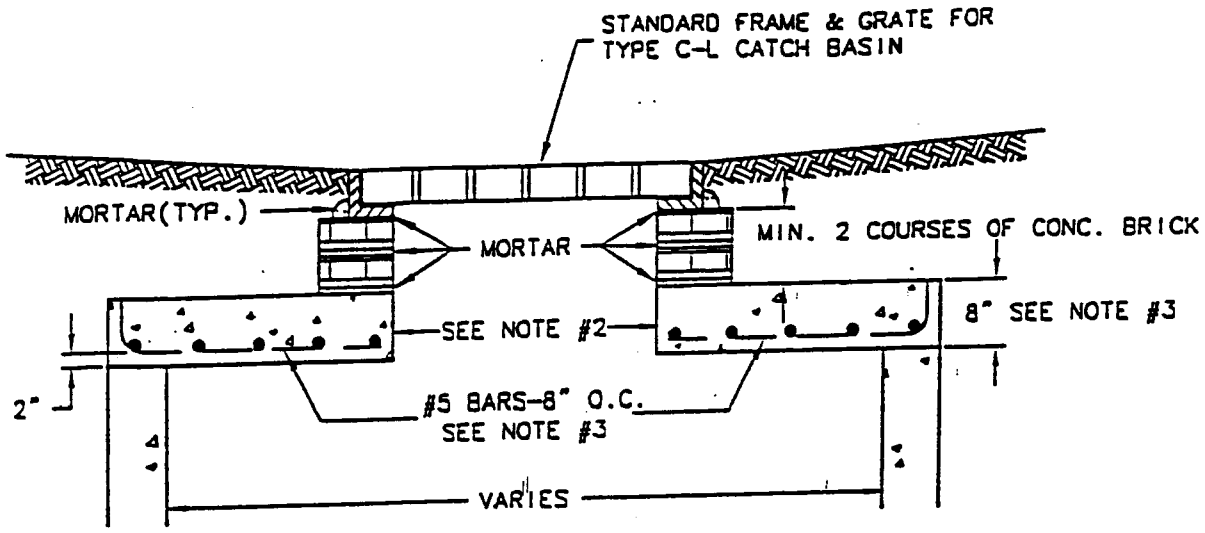


## TRANSITION C.B. SLAB – SECTION

**NOTES:**

1. TRANSITION SLAB FOR CATCH BASINS AND DRAIN INLETS CAN BE USED IN PLACE OF CORBELLING AS DIRECTED BY THE ENGINEER.
2. LOCATION AND SIZE OF OPENING VARIES.
3. THICKNESS OF SLAB AND REINFORCING WILL VARY ACCORDING TO DIMENSIONS. DESIGN OF SLAB SHALL MEET ALL THE REQUIREMENTS FOR A H20 LOADING.

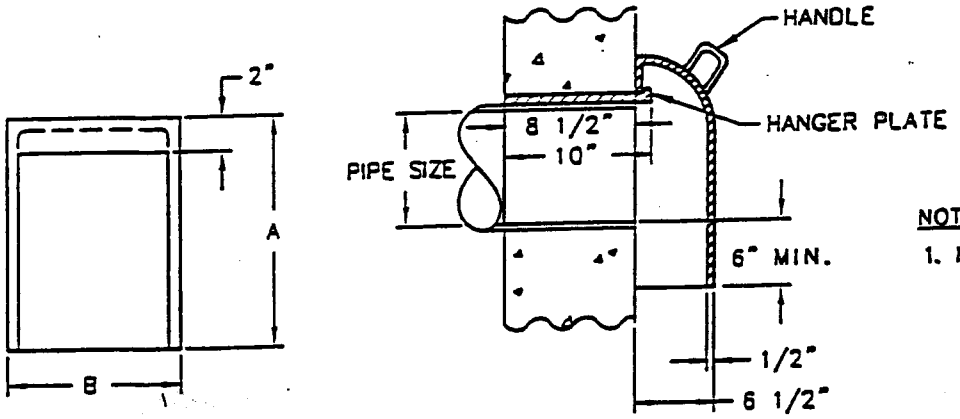


**NOTE:**

1. MANUFACTURER CATALOG NUMBER TO BE INDICATED ON DETAIL DRAWINGS FOR CAST IRON TRAPS.

## CATCH BASIN DEBRIS TRAP

(OPTIONAL – AT THE DIRECTION OF THE TOWN ENGINEER)

| A | B | PIPE SIZE | WT. LBS. | SETTING METHOD |
|---|---|---|---|---|
| 16" | 12" | TO 6" | 70 | 2 HOOKS |
| 18" | 12" | 8" | 75 | 2 HOOKS |
| 20" | 12" | 10" | 85 | 2 HOOKS |
| 22" | 16" | 12" | 100 | 2 HOOKS |
| 25" | 17" | 15" | 135 | 2 HOOKS |
| 28" | 20" | 18" | 155 | 2 HOOKS |

TOWN OF *NEWINGTON*

TYPICAL
TRANSITION CATCH BASIN SLAB
AND
CATCH BASIN DEBRIS TRAP

Not to Scale

PLATE

REVISIONS

| No. | Description | Date | Approved |
|---|---|---|---|
| | | | |
| | | | |
| | | | |

Drawn By:
Checked By:
Date:
File: plate

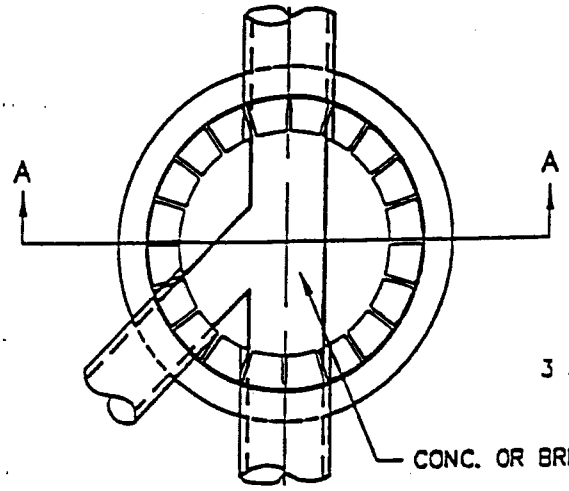


SECTION B–B

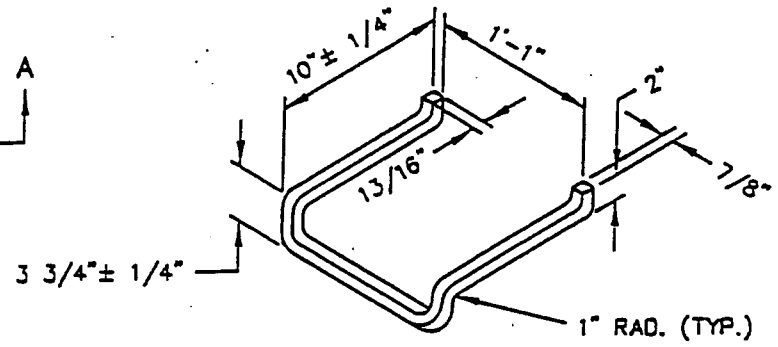


STANDARD STEPS

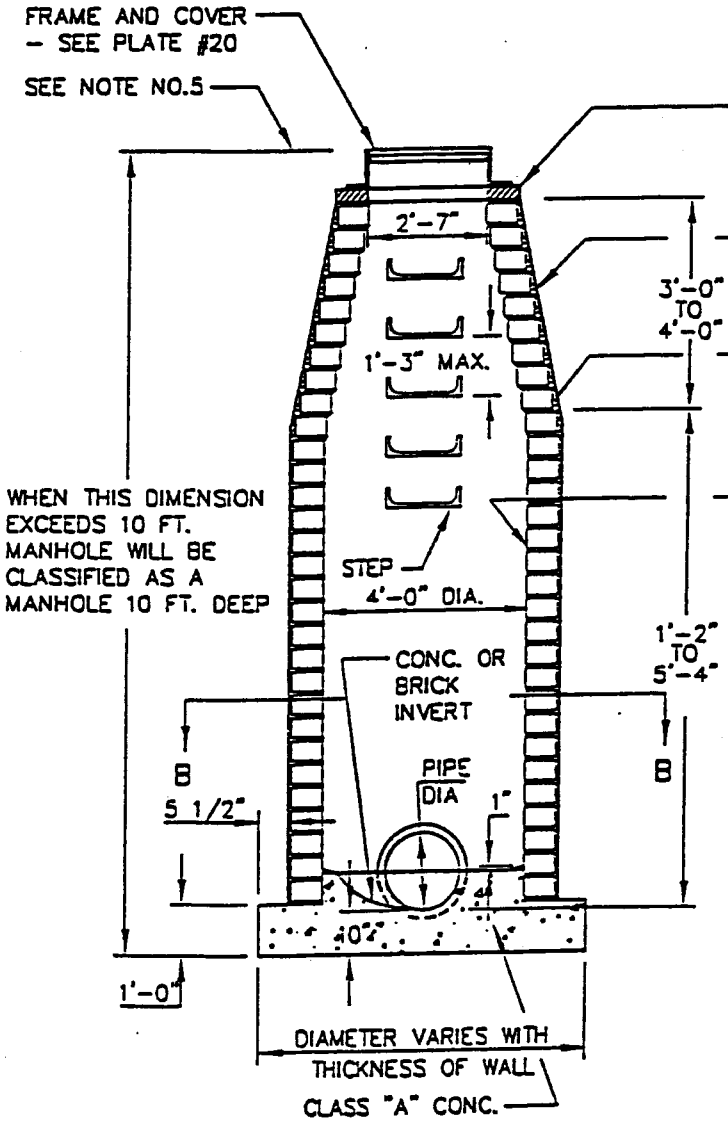


SECTION A–A

NOTES:

1. INVERTS TO BE FORMED IN CONC. OR BRICK.
2. WALL SHALL BE 12" THICK WHEN DEPTH OF MANHOLE IS GREATER THAN 10' DEEP.
3. WALLS SHALL BE BUILT OF MASONRY CONC. UNITS OR CLASS "A" CONC. AT THE OPTION OF THE CONTRACTOR.
4. MASONRY CONC. UNITS TO BE LAID IN CEMENT SAND MORTAR 1:2 MIX. JOINTS NOT TO BE OVER 1/2" THICK ON INSIDE FACE OF WALL.
5. FRAME AND COVER TO BE SET FLUSH WITH BINDER COURSE. A MANHOLE RISER RING (PLATE 20) SHALL BE USED TO BRING MANHOLE COVER TO FINISHED GRADE PRIOR TO THE COMPLETION OF THE FINAL SURFACE COURSE.

TOWN OF NEWINGTON

REVISIONS

| No. | Description | Date | Approved |
|---|---|---|---|
| | | | |
| | | | |
| | | | |

| | |
|---|---|
| Drawn By: | Checked By: |
| Date: | File: plate |

TYPICAL

STORM DRAIN MANHOLE – MASONRY CONCRETE UNITS

Not to Scale

PLATE

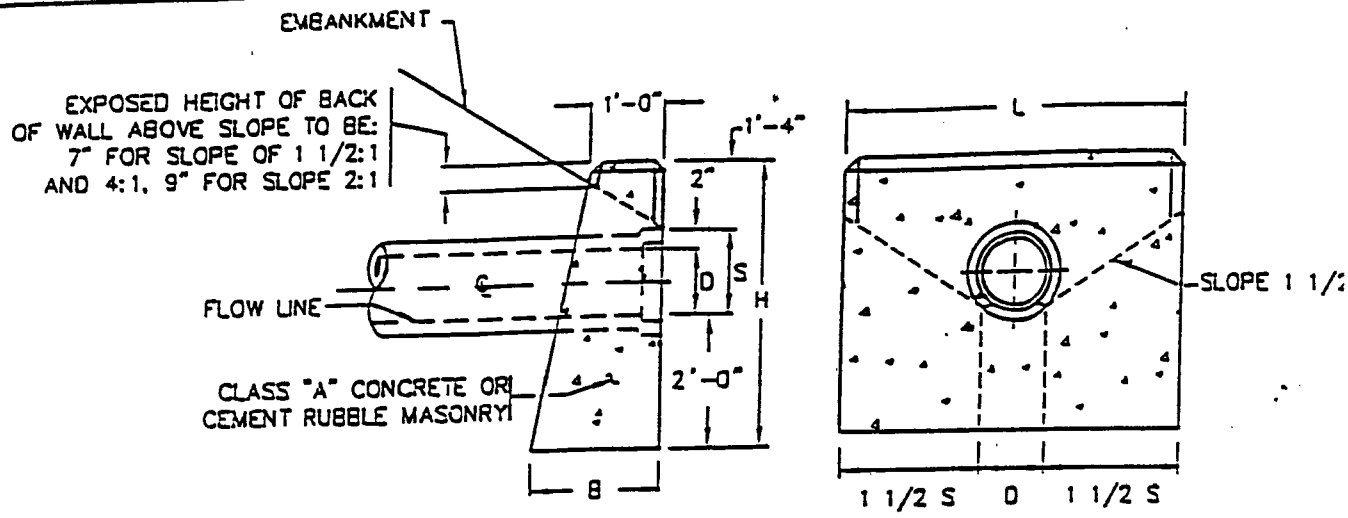


WALL AT FOOT OF SLOPE

FRONT ELEVATION

| DIMENSIONS AND QUANTITIES FOR ONE ENDWALL BASED ON S=D+2" | | | | | | |
|---|---|---|---|---|---|---|
| D | S | H | L | BATTER | B | VOL. |
| INS. | FT.& INS. | FT.& INS. | FT.& INS. | INS./FT. | FT.& INS. | CU.YD. |
| 12" | 1'-2" | 4'-6" | 4'-6" | 2 1/2" | 1'-11 1/4" | 1.10 |
| 15" | 1'-5" | 4'-9" | 5'-6" | 2 1/2" | 1'-11 7/8" | 1.45 |
| 18" | 1'-8" | 5'-0" | 6'-6" | 2 1/2" | 2'-0 1/2" | 1.83 |
| 24" | 2'-2" | 5'-6" | 8'-6" | 2 1/2" | 2'-1 3/4" | 2.72 |
| 30" | 2'-8" | 6'-0" | 10'-6" | 2 1/2" | 2'-3" | 3.79 |
| 36" | 3'-2" | 6'-6" | 12'-6" | 3" | 2'-7 1/2" | 5.45 |
| 42" | 3'-8" | 7'-0" | 14'-6" | 3" | 2'-9" | 6.40* |
| 48" | 4'-2" | 7'-6" | 16'-6" | 3" | 2'-10 1/2" | 8.00* |

* VOLUME BASED ON "D" AND WALL THICKNESS AT CENTER LINE OF PIPE HAS BEEN DEDUCTED

## NOTES:

ALL CONSTRUCTION DIMENSIONS ARE NOMINAL.

WHEN ONE ENDWALL IS TO BE USED FOR TWO PIPES, THE DIMENSIONS OF THAT ENDWALL SHALL CONFORM TO THAT REQUIRED FOR THE LARGER PIPE, EXCEPT THE DIMENSION "L" SHALL BE INCREASED BY THE OUTSIDE DIAMETER OF THE SMALLER PIPE PLUS ONE FOOT.

THESE ENDWALLS WILL BE USED ONLY AT LOCATIONS WHERE THEY WILL NOT BE A HAZARD TO VEHICLES THAT RUN OFF THE ROAD. IN NO CASE WILL THE LOCATION OF THESE ENDWALLS BE LESS THAN 30' FROM THE EDGE OF THE TRAVELED WAY.

COST REINFORCING BARS TO BE INCLUDED IN THE CONTRACT UNIT PRICE FOR CLASS "A" CONCRETE.

ALL EDGES OF EXPOSED SURFACES TO BE CHAMFERED APPROXIMATELY ONE INCH.

H = TOTAL HEIGHT OF ENDWALL
B = BASE
D = INSIDE DIAMETER OF PIPE
S = HEIGHT OF SLOPE ABOVE FLOW LINE AT FACE OF WALL-MINIMUM=D+2
L = LENGTH OF WALL=3S=D

TOWN OF NEWINGTON

TYPICAL

STANDARD ENDWALL

| REVISIONS | | | |
|---|---|---|---|
| No. | Description | Date | Approved |
| | | | |
| | | | |
| | | | |
| Drawn By: | | Checked By: | |
| Date: | | File: | |

Not to Scale

| DIMENSIONS | | | | | | |
|---|---|---|---|---|---|---|
| OPENING | | WALL | | | | FOOTING |
| DIA. | B | H | G | L | M | F |
| 15"• | 1.2 | 2'-3" | 3'-7" | 1'-0" | 1'-3" | 1'-6" |
| 18"• | 1.8 | 2'-6" | 3'-10" | 1'-2" | 1'-7" | 1'-6" |
| 24"• | 3.1 | 3'-0" | 4'-4" | 1'-5" | 2'-1" | 2'-0" |
| 30"•• | 4.9 | 3'-6" | 4'-10" | 1'-9" | 2'-5" | 2'-0" |

NOTES:

• FOR SLOPES 4:1 OR LESS PRECAST FLARED END SECTION CAN BE USED IN PLACE OF CONC. END WALLS FOR ALL PIPES 24" IN DIA. OR LESS.

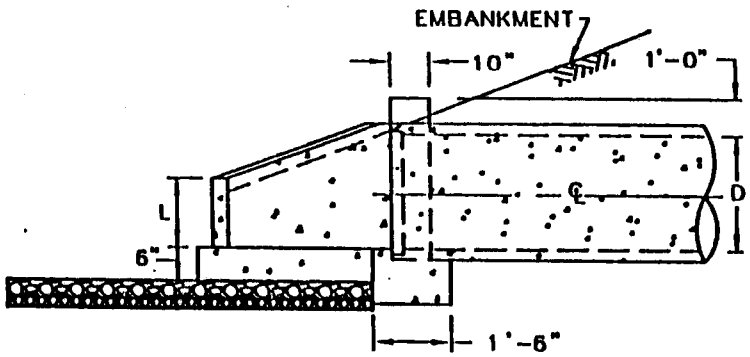


SIDE ELEVATION

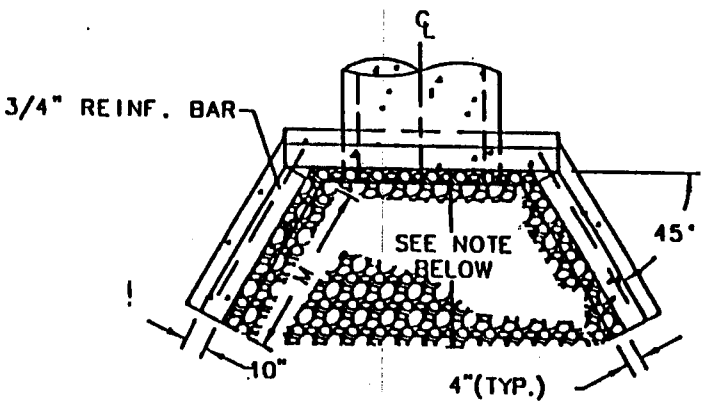


PLAN

NOTE:
LENGTH OF RIPRAP DEPENDENT ON THE OUTLET DISCHARGE AND OUTLET PIPE SIZE

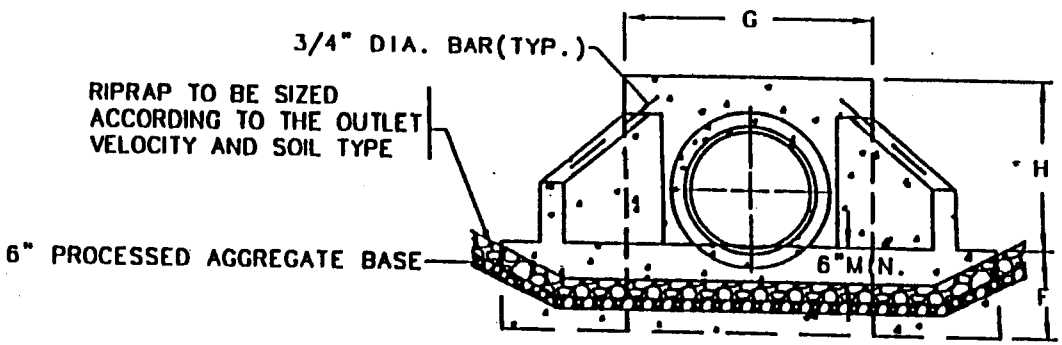


FRONT ELEVATION

| REVISIONS | | | |
|---|---|---|---|
| No. | Description | Date | Approved |
| | | | |
| | | | |
| | | | |

Drawn By: | Checked By:
Date: | File: plate

TOWN OF NEWINGTON

TYPICAL

WING TYPE ENDWALL FOR PIPES 30" DIAMETER AND SMALLER

Not to Scale

PLATE

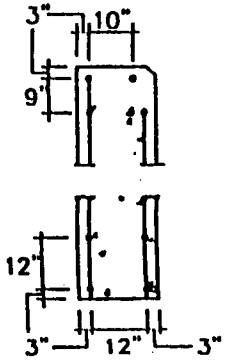


DETAIL OF BAR SPACING

| DIMENSIONS AND QUANTITIES FOR ONE WING TYPE ENDWALL | | | | | | | | | | | |
|---|---|---|---|---|---|---|---|---|---|---|---|
| D | B | C | G | H | K | L | P | R | Q | W | VOL. |
| INS. | FT.& IN. | FT.& IN. | FT.& IN. | FT.& IN. | FT.& IN. | FT.& IN. | FT.& IN. | FT.& IN. | FT.& IN. | FT.& IN. | CU.YD. |
| 36" | 1'-6" | 2'-0" | 3'-3" | 6'-8" | 9'-1 1/2" | 7'-3 3/4" | 1'-4 7/8" | 0'-9 3/4" | 3'-4 7/8" | 5'-5 3/4" | 5.87 |
| 42" | 1'-6" | 2'-0" | 3'-3" | 7'-2" | 9'-10 1/2" | 7'-9 3/4" | 1'-6 3/8" | 0'-9 3/4" | 3'-10 1/2" | 6'-7 3/4" | 6.67 |
| 48" | 1'-7" | 2'-6" | 3'-9" | 8'-2" | 10'-10" | 8'-3 3/4" | 1'-9 3/8" | 0'-11 1/4" | 4'-9" | 7'-9 1/2" | 9.11 |
| 60" | 1'-7" | 2'-6" | 3'-9" | 9'-2" | 12'-4 1/2" | 9'-3 3/4" | 2'-0 3/8" | 0'-11 1/4" | 5'-9" | 10'-1 1/4" | 12.43 |
| 72" | 1'-7" | 2'-6" | 3'-9" | 10'-2" | 13'-10 3/4" | 10'-3 3/4" | 2'-3 3/8" | 0'-11 1/4" | 6'-9" | 12'-5" | 16.30 |

NOTES:

ALL CONSTRUCTION DIMENSIONS ARE NOMINAL.

WHEN ONE ENDWALL IS TO BE USED FOR TWO PIPES, THE DIMENSIONS OF THAT ENDWALL SHALL CONFORM TO THAT REQUIRED FOR THE LARGER PIPE, EXCEPT THE DIMENSION "L" SHALL BE INCREASED BY THE OUTSIDE DIAMETER OF THE SMALLER PIPE PLUS ONE FOOT.

THESE ENDWALLS WILL BE USED ONLY AT LOCATIONS WHERE THEY WILL NOT BE A HAZARD TO VEHICLES THAT RUN OFF THE ROAD IN NO CASE WILL THE LOCATION OF THESE ENDWALLS BE LESS THAN 30' FROM THE EDGE OF THE TRAVELED WAY.

NOTES:

REINFORCEMENT TO BE PLACED FOR 48" PIPE AND LARGER

COST REINFORCING BARS TO BE INCLUDED IN THE CONTRACT UNIT PRICE FOR CLASS "A" CONCRETE.

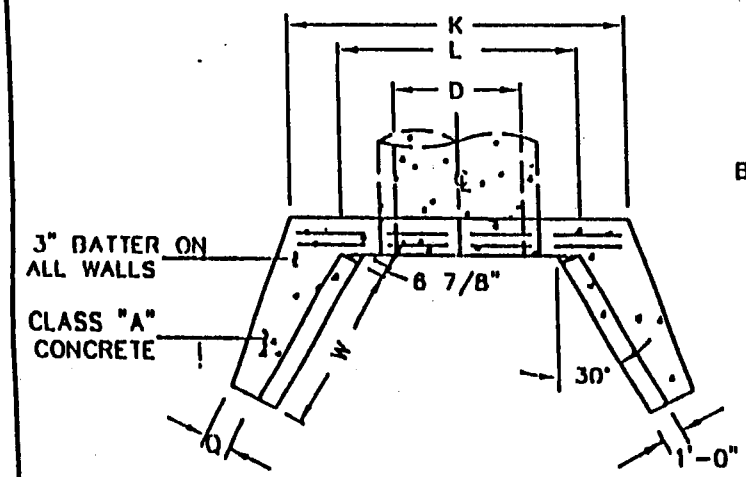


NOTE: ENDWALL SYMMETRICAL ABOVE CENTER LINE OF PIPE

PLAN

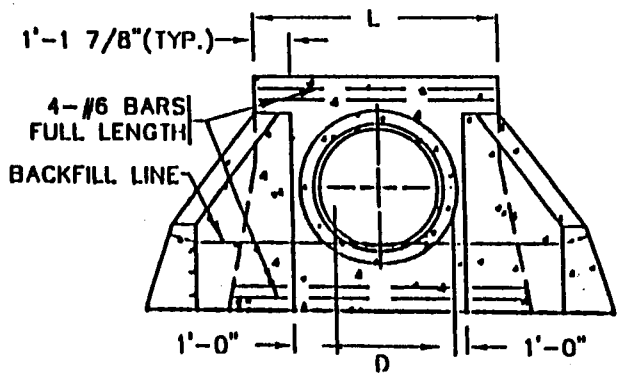


FRONT ELEVATION

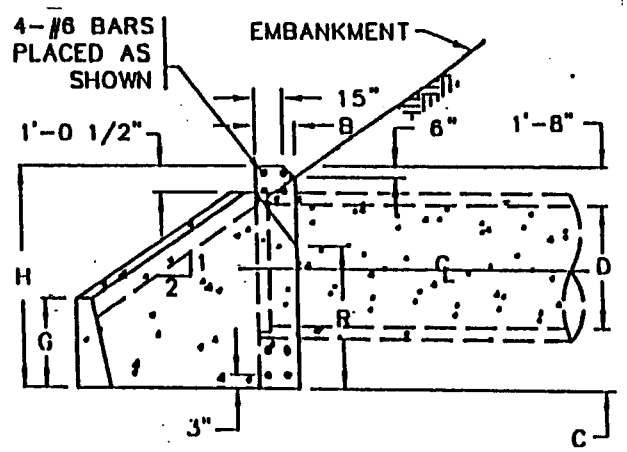


SIDE ELEVATION

| REVISIONS | | | |
|---|---|---|---|
| No. | Description | Date | Approved |
| | | | |
| | | | |
| | | | |

TOWN OF *NEWINGTON*

TYPICAL

WING TYPE ENDWALL FOR PIPES 36" DIAMETER AND LARGER

PLATE

| DIMENSIONS FOR ONE ENDWALL BASED ON S = D + 2 | | | | | |
|---|---|---|---|---|---|
| D | S | H | L | BATTER | B |
| 15" * | 1'-5" | 4'-9" | 5'-6" | 2 1/2" | 1'-11 7/8" |
| 18" * | 1'-8" | 5'-0" | 6'-6" | 2 1/2" | 2'-0 1/2" |
| 24" * | 2'-2" | 5'-6" | 8'-6" | 2 1/2" | 2'-1 3/4" |
| 30" | 2'-8" | 6'-0" | 10'-6" | 2 1/2" | 2'-3" |
| 36" | 3'-2" | 6'-6" | 12'-6" | 3" | 2'-7 1/2" |
| 42" | 3'-6" | 7'-0" | 14'-6" | 3" | 2'-9" |
| 48" | 4'-2" | 7'-6" | 16'-6" | 3" | 2'-10 1/2" |

* Plunge Pool is Optional
Outlet Velocity is Control

H – TOTAL HEIGHT OF END WALL
B – BASE
D – INSIDE DIA. OF PIPE
S – HEIGHT OF SLOPE ABOVE FLOW LINE AT FACE OF WALL MIN.= D+2
L – LENGTH OF WALL= 3S+D

STANDARD ENDWALL

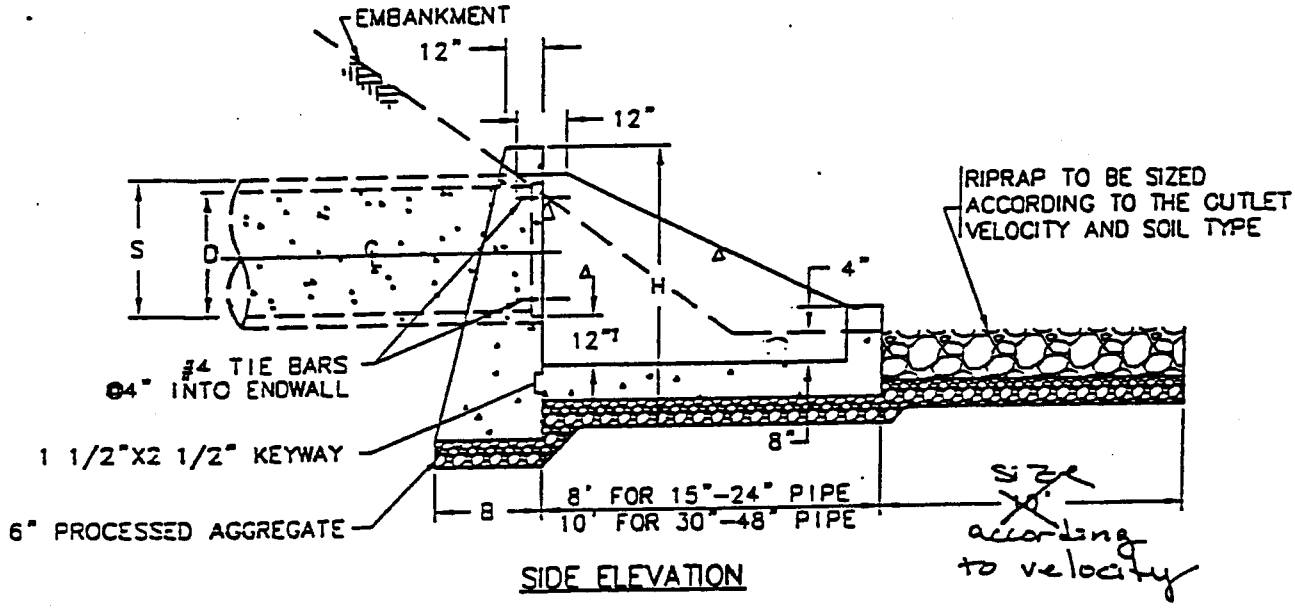


SIDE ELEVATION

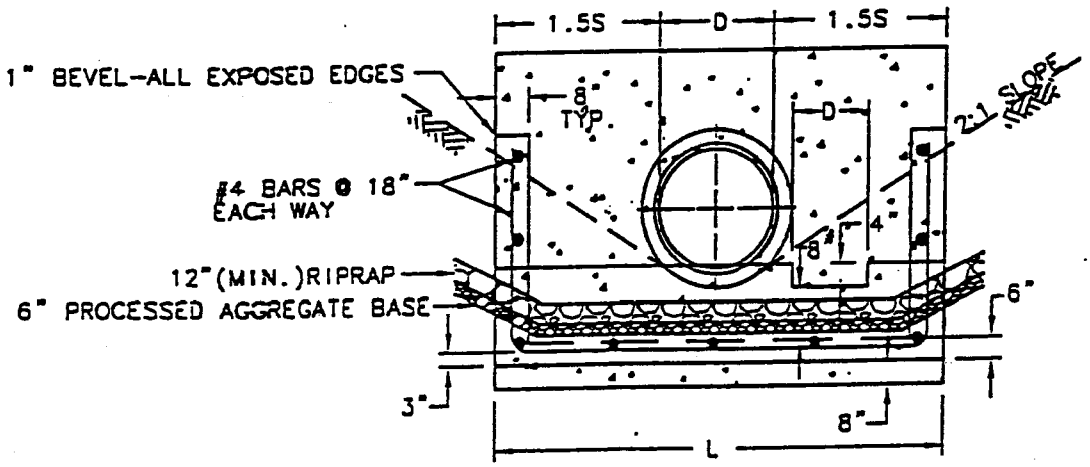


FRONT ELEVATION

TOWN OF NEWINGTON

TYPICAL

IMPACT BASIN

| REVISIONS | | | |
|---|---|---|---|
| No. | Description | Date | Approved |
| | | | |
| | | | |
| | | | |

| | |
|---|---|
| Drawn By: | Checked By: |
| Date: | File: plate |

Not to Scale

PLATE

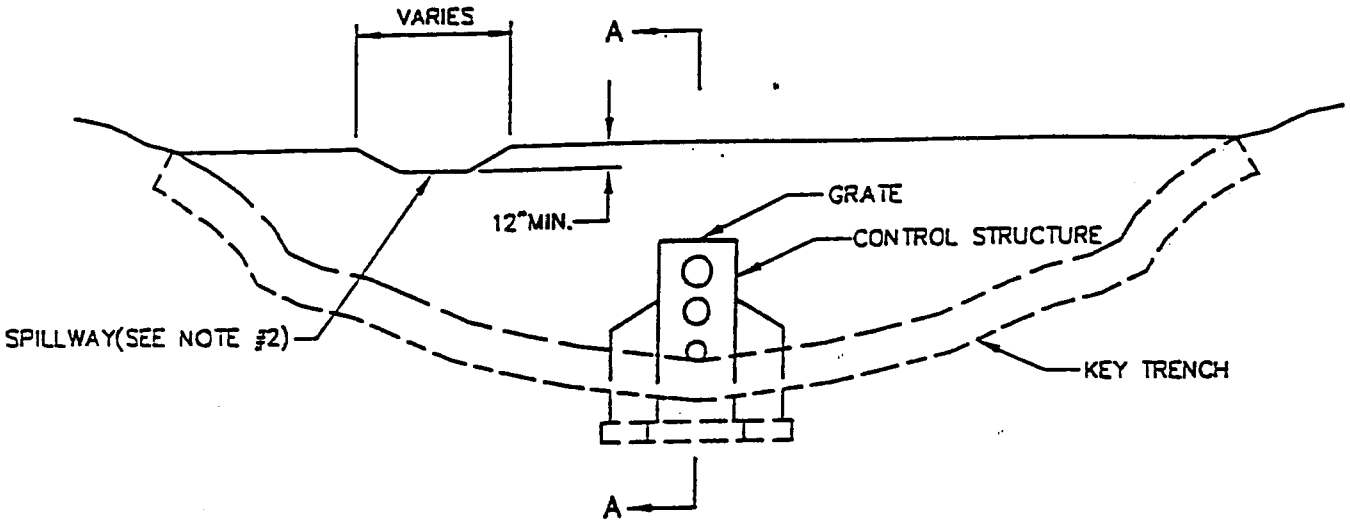


FRONT ELEVATION

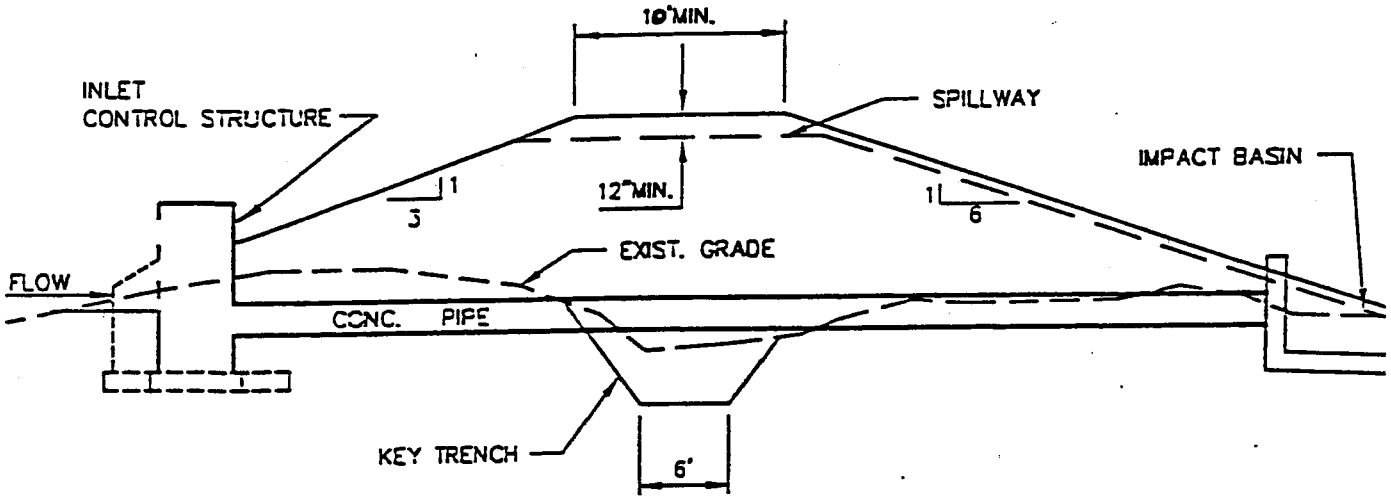


SECTION A – A

NOTES:

1. TO FACILITATE COMPLETE DRAINAGE AND TO AVOID SILTATION, THE BOTTOM OF ALL DETENTION BASINS SHALL HAVE A 2' WIDE BOTTOM DITCH WITH A SLOPE NOT LESS THAN ONE PERCENT. ALL SIDES OF THE BASIN SHALL BE PITCHED TOWARD THE DITCH.
2. THE SPILLWAY SHALL BE STABILIZED WITH CONCRETE, CONCRETE BLOCK PAVERS, BIT. CONCRETE, OR RIP-RAP TO PREVENT SLOPE EROSION.
3. CONCRETE ANTI-SEEP COLLARS SHALL BE INSTALLED ALONG THE PIPE. SPACING TO BE DETERMINED BY THE DESIGN ENGINEER(DESIGN OF WHICH IS TO BE INCLUDED WITH THE TYPICAL CROSS SECTION.)
4. SLOPES TO BE COMPLETED WITH A MIXTURE OF WILD FLOWER SEEDS AND ANNUAL RYE GRASS WHERE REQUESTED BY THE TOWN, OR AS DESIGNATED BY THE ENGINEER.

TOWN OF *NEWINGTON*

TYPICAL

DETENTION POND DAM DETAIL

REVISIONS

| No. | Description | Date | Approved |
|---|---|---|---|
| | | | |
| | | | |
| | | | |

| | |
|---|---|
| Drawn By: | Checked By: |
| Date: | File: plate |

Not to Scale

PLATE

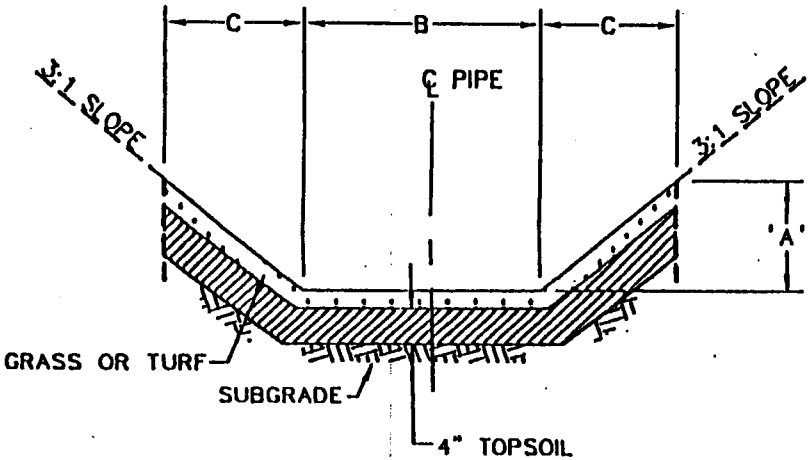


GRASS OR TURF SECTION

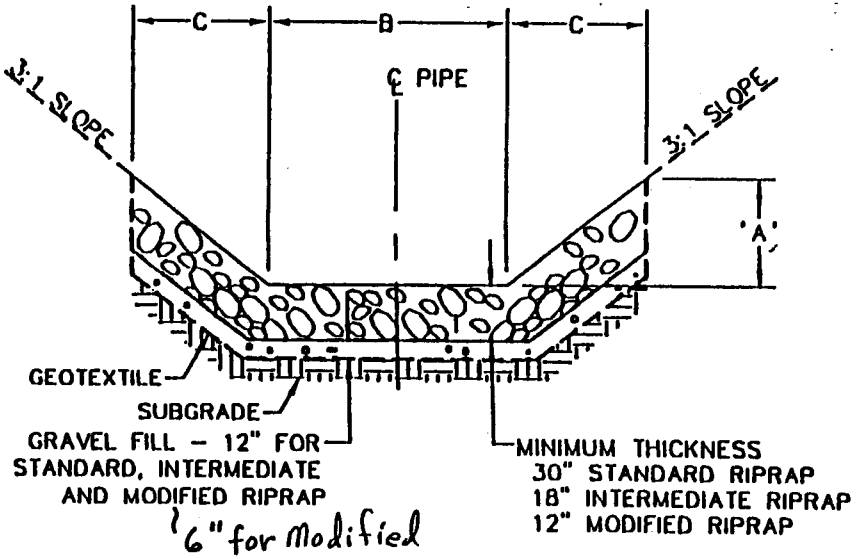


RIPRAP SECTION

NOTE:

FOR GRADATION OF STANDARD, INTERMEDIATE, AND MODIFIED RIPRAP, SEE SECTION 3.12 OF THE PUBLIC IMPROVEMENT STANDARDS

| DIMENSIONS FOR GRASS OR RIPRAP DITCHES/CHANNELS | | | | | | | | | | | | |
|---|---|---|---|---|---|---|---|---|---|---|---|---|
| SECTION TO CONFORM WITH PIPE OUTLET SIZE | | | | | | | | | | | | |
| PIPE SIZES | 15" | 18" | 21" | 24" | 27" | 30" | 36" | 42" | 48" | 54" | 60" | 72" |
| A | 8" | 9" | 11" | 12" | 14" | 15" | 18" | 21" | 24" | 27" | 30" | 36" |
| B | 27" | 30" | 33" | 36" | 39" | 42" | 48" | 54" | 60" | 66" | 72" | 84" |
| C | 24" | 27" | 33" | 36" | 42" | 45" | 54" | 63" | 72" | 81" | 90" | 108" |
| DITCHES | | | | | | CHANNELS | | | | | | |

| REVISIONS | | | |
|---|---|---|---|
| No. | Description | Date | Approved |
| | | | |
| | | | |
| | | | |
| Drawn By: | | Checked By: | |

TOWN OF NEWINGTON

TYPICAL
DRAINAGE DITCH
AND
CHANNEL SECTIONS

PLATE 27

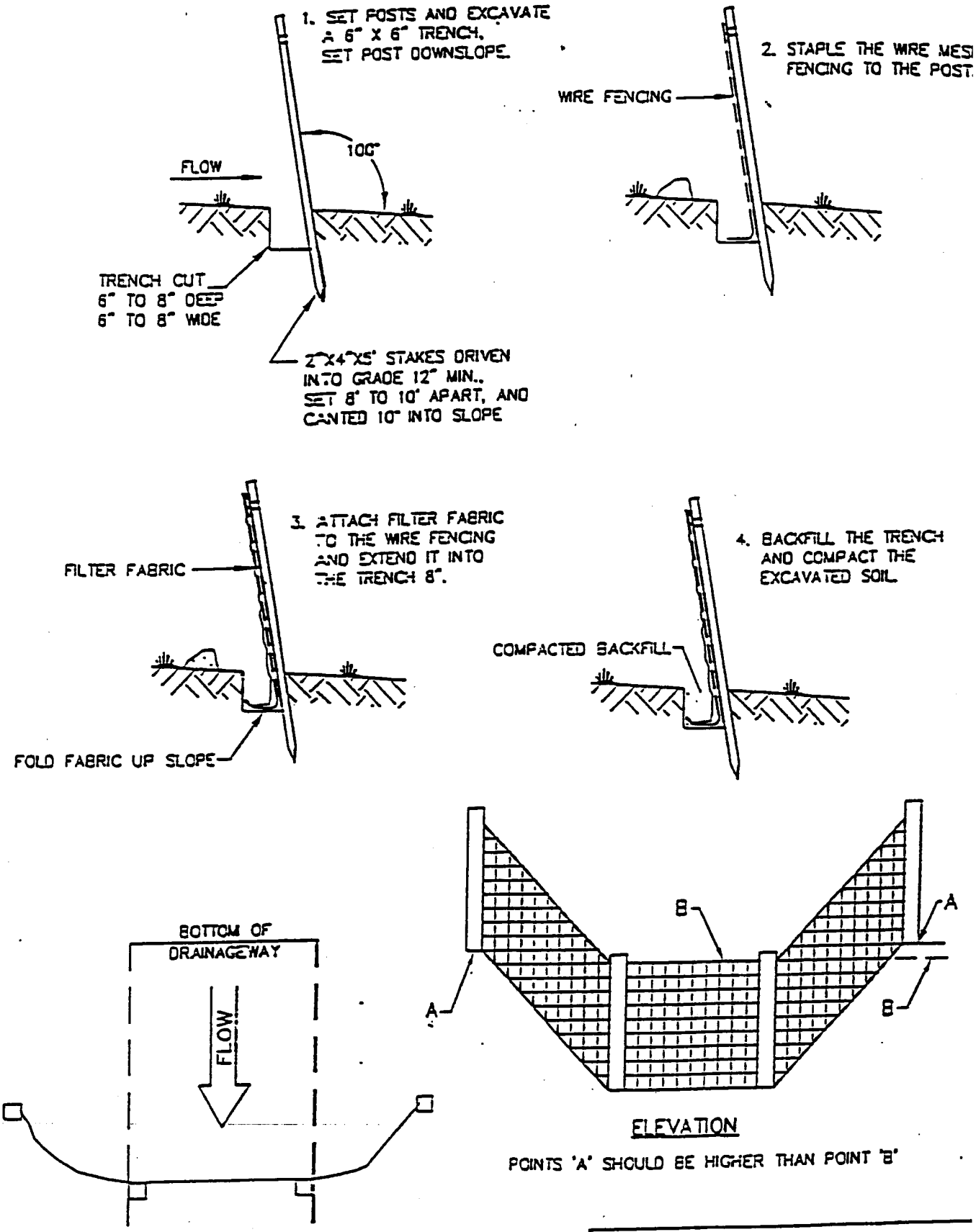


TOWN OF NEWINGTON

TYPICAL

FILTER FABRIC FENCE FOR EROSION CONTROL

| REVISIONS | | | |
|---|---|---|---|
| No. | Description | Date | Approved |
| | | | |
| | | | |
| | | | |
| Drawn By: | | Checked By: | |
| Date: Oct. | | File: plate. | |

Not to Scale

PLATE

# ROOFTOP INFILTRATION VIA DRYWELL

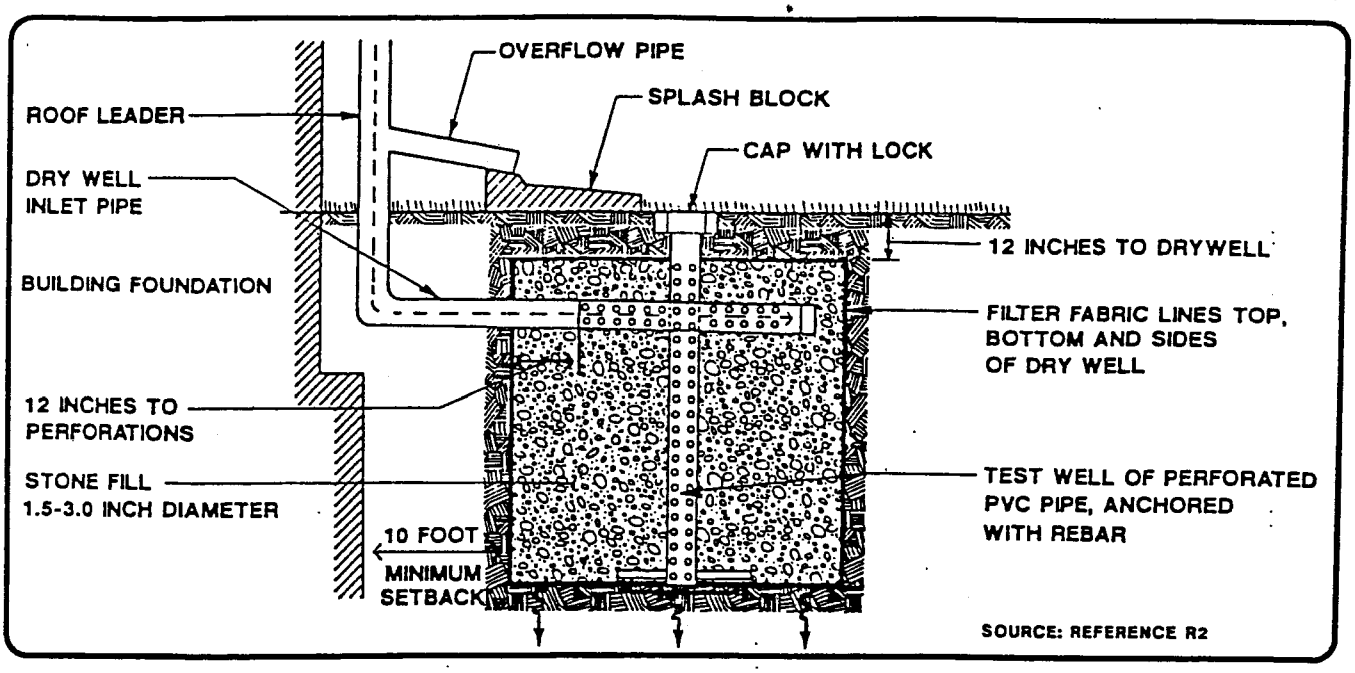


## DESIGN CRITERIA

Hydrologic Soil Groups A & B only
Size with a volume to capture frequent storms up to 1/2" rainfall
Provide gutter screens to protect from clogging with leaves
Provide overflow pipe

## APPLICATIONS

To accept rooftop runoff from residential and commercial buildings
Should not be placed near building underdrains otherwise infiltration will be short-circuited

## ADVANTAGES

Reduces runoff volume
Provides clean water infiltration to enhance groundwater supply
Reduces size of storm drains required downstream
Helps maintain base flow

## DISADVANTAGES

Clogging possible
Periodic rejuvenation may be required

TOWN OF *NEWINGTON*

TYPICAL

Not to Scale

PLATE

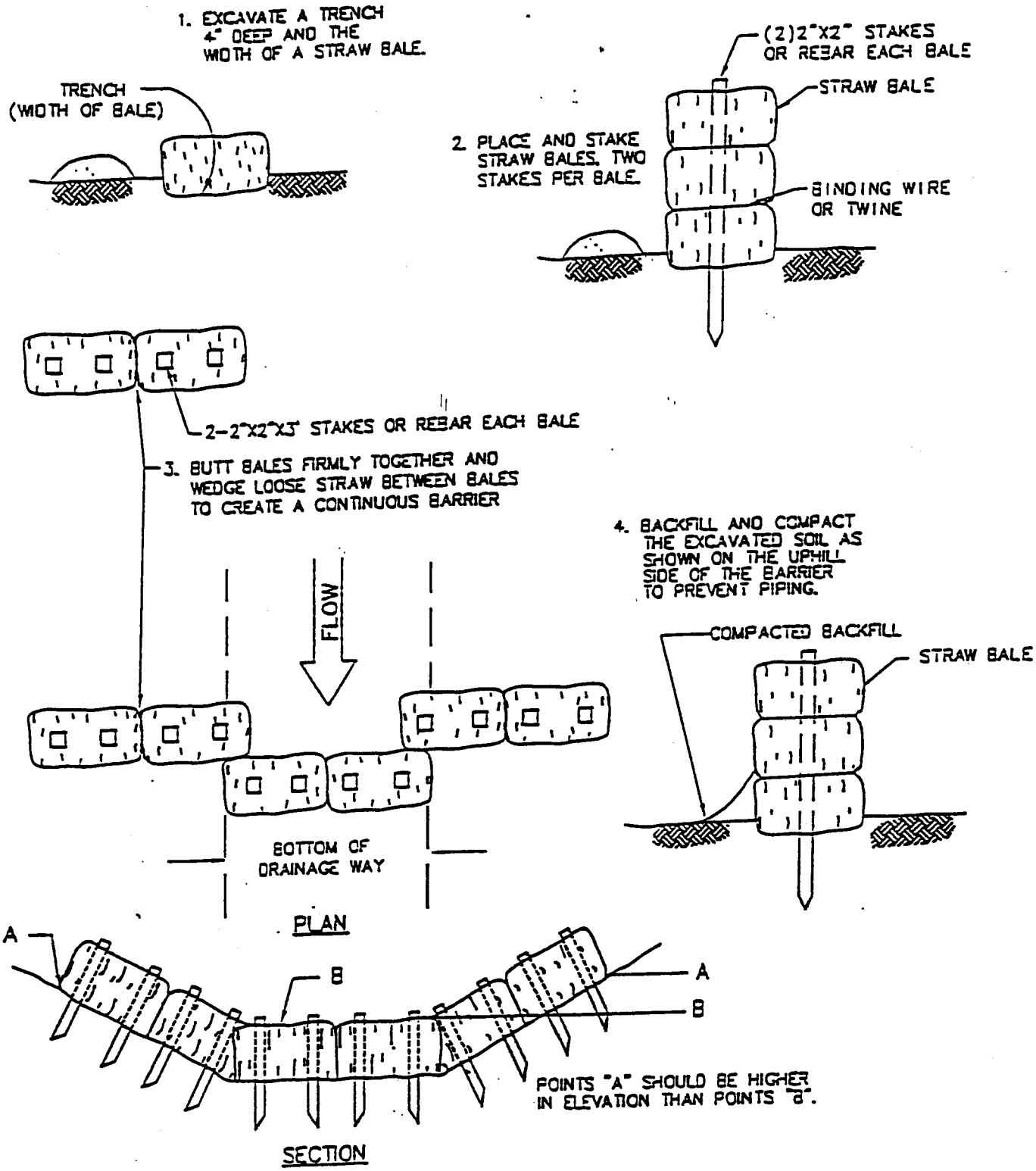


NOTES:

1. HAY BALES SHALL BE MAINTAINED AND/OR REPLACED AS REQUIRED OR AS DIRECTED BY THE ENGINEER.
2. PLACE HAY BALES SUCH THAT TWINE OR BINDING WIRE IS PARALLEL TO THE EXISTING GROUND.

TOWN OF NEWINGTON

TYPICAL

BALED HAY/STRAW FOR EROSION CONTROL

| REVISIONS | | | |
|---|---|---|---|
| No. | Description | Date | Approved |
| | | | |
| | | | |
| | | | |
| Drawn By: | | Checked By: | |
| Date: | | File: plate | |

Not to Scale

PLATE

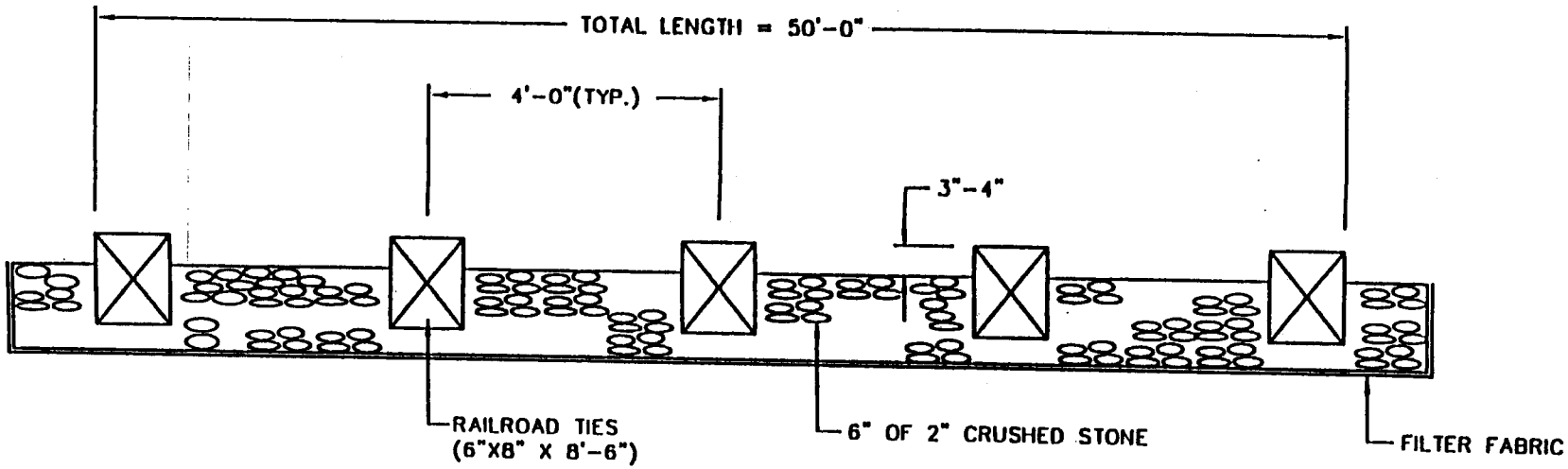


SECTION A – A

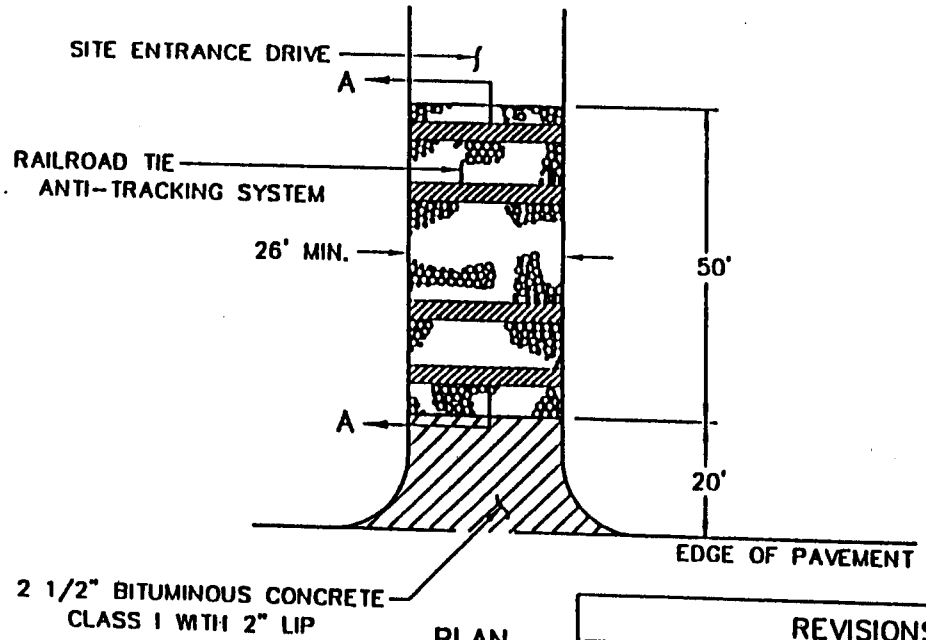


PLAN

NOTES:

1. MAINTAIN ANTI-TRACKING PAVEMENT IN GOOD CONDITION THROUGH OUT CONSTRUCTION PERIOD.
2. ROADWAY SHALL BE SWEPT DAILY TO REMOVE ANY MATERIAL THAT MAY BE TRACKED ONTO THE PAVEMENT.

REVISIONS

| No. | Description | Date | Approved |
|---|---|---|---|
| | | | |
| | | | |
| | | | |

Drawn By: N.F. Checked By: M.F.C.

TOWN OF NEWINGTON

TYPICAL

ANTI-TRACKING APRON

PLATE

# SEDIMENT CHAMBER

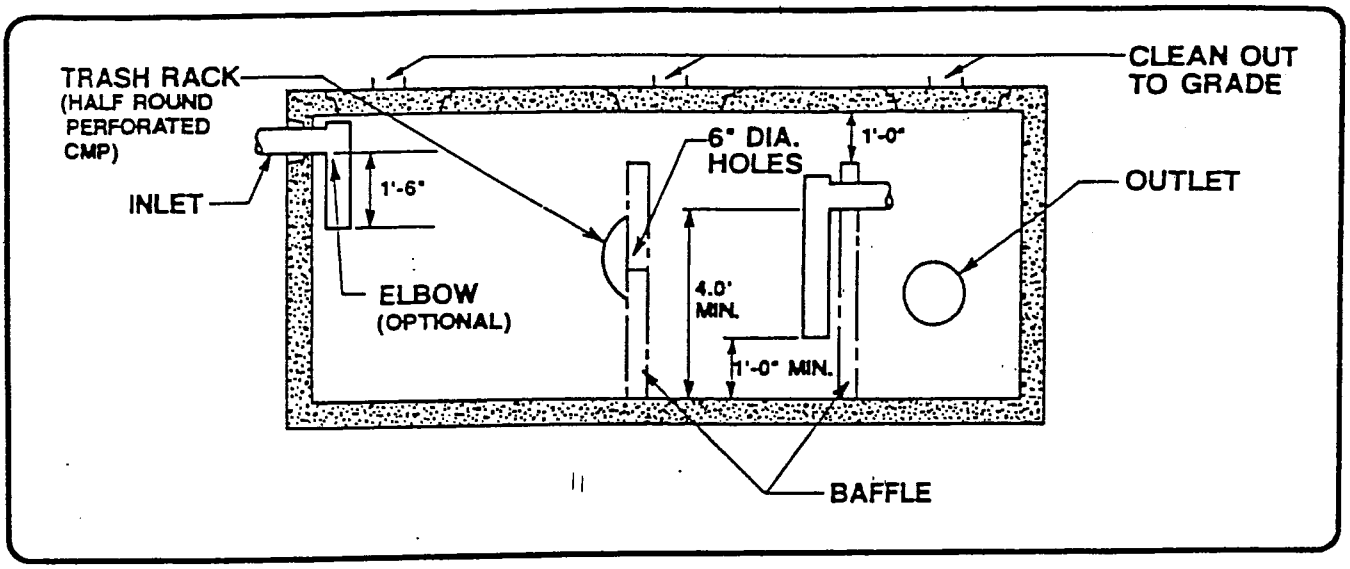


## DESIGN CRITERIA

Provide 400 cubic feet of storage per impervious acre contributing to the drain
Minimize contributing area to 1 acre or less per unit
Provide a high flow bypass where possible

## APPLICATIONS

Small and large parking areas with large hydrocarbon and sediment loads and vehicular traffic
Use as a pretreatment prior to infiltrative systems to prevent clogging

## ADVANTAGES

Removes coarse sediments
Removes floatables
Removes various hydrocarbon films

## DISADVANTAGES

Must inspect 4 times yearly
Limited pollutant removal capacity
Possible re-suspension of fine settled pollutants

TOWN OF NEWINGTON

TYPICAL

Not to Scale

PLATE

# INFILTRATION TRENCH

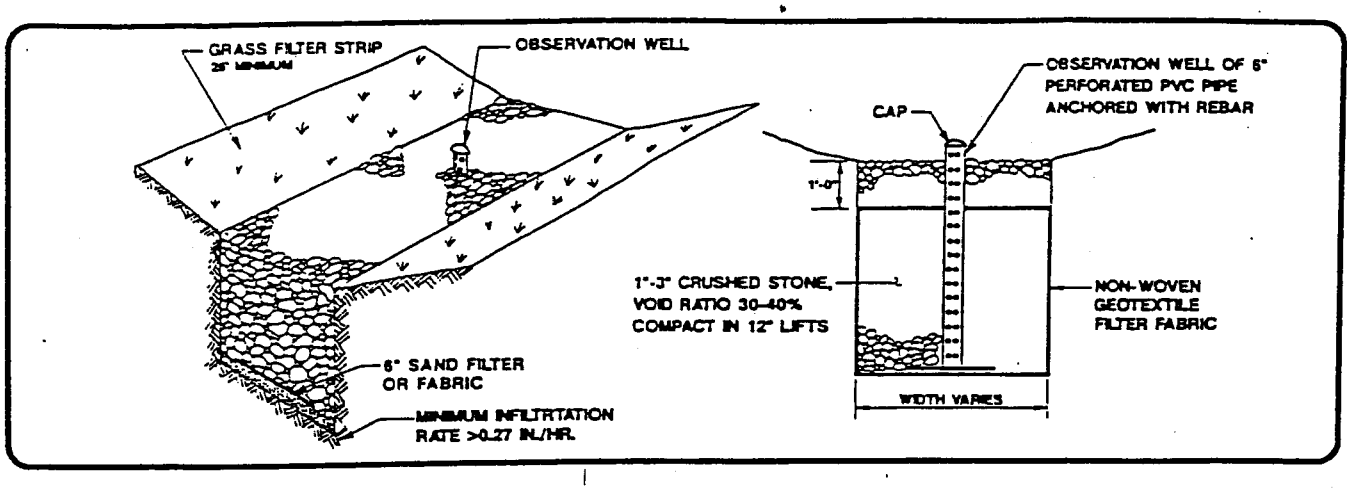


## DESIGN CRITERIA

Cannot be located in fill
Locate a minimum 100 feet from a water supply well
Provide 4 ft minimum clearance from trench bottom to bedrock
Provide 2 ft to 4 ft minimum clearance from trench bottom to seasonally high water table
Locate 10 ft down gradient and 100 ft upgradient of foundations
Design for 3 day maximum draining time, 6 hours minimum
Design to serve 5 acres or less
Design to hold 1/2 inch of runoff from impervious acreage at a minimum
All runoff should be pre-treated via sediment chambers or vegetative filter strips
Drip line of trees should not extend over trench
Trench bottom should be level
Hydrologic Soil Groups A & B

## VARIATIONS

May be used with stone reservoir only
May be located at base of vegetated swales behind check dams
May be used in combination with a high level overflow pipe for partial exfiltration
May be used with overflow berm or level spreader

## APPLICATIONS

Residential lots and small commercial areas
Rooftop runoff
Adjacent to parking areas with grass filter strips receiving sheet flow
Highway medians
Below swales

## ADVANTAGES

Easy to fit into site
Reduces runoff
Encourages infiltration
Filters pollutants, metals proven to bind in soils
Can nearly reproduce natural hydrological conditions
Maintains baseflow

## DISADVANTAGES

Periodic inspection required to monitor function
Can clog with sediment
Possible risk of groundwater contamination from spills
Regular maintenance required
Rarely achieves peak runoff control

TOWN OF *NEWINGTON*

TYPICAL

Not to Scale

PLATE

# UNDERGROUND EXFILTRATION STORAGE

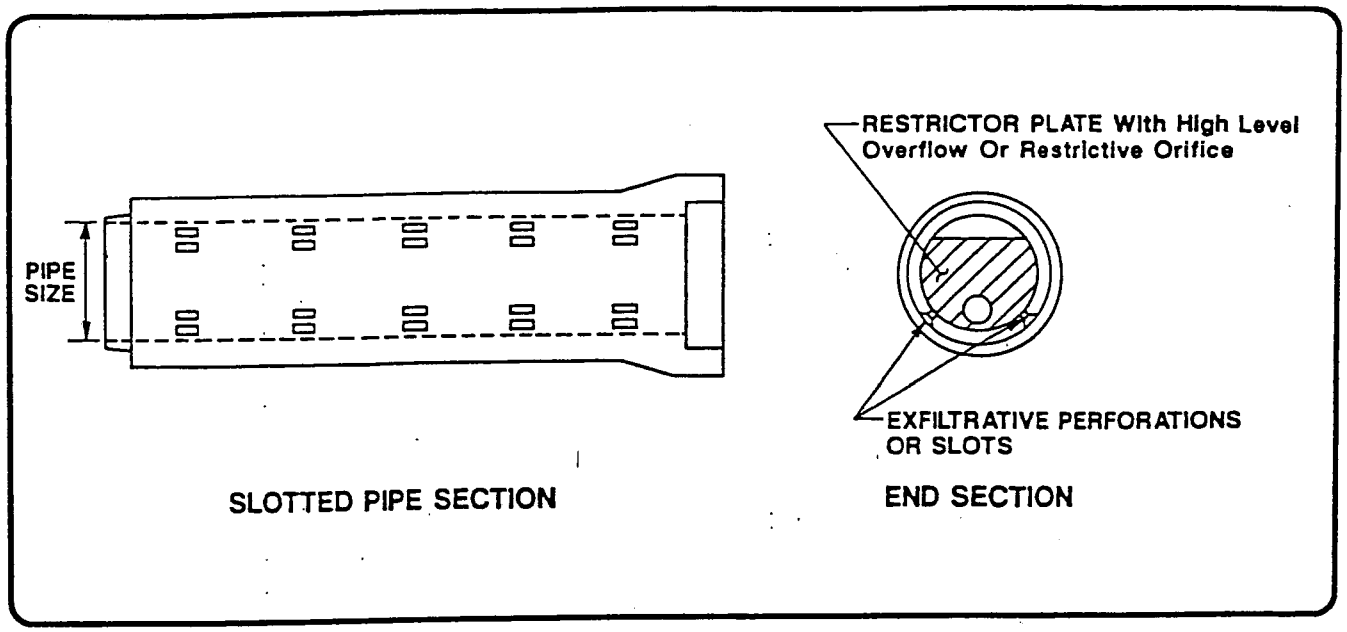


## DESIGN CRITERIA

Two to four feet to groundwater
Four feet to bedrock
Pre-treat runoff to remove sediment
Use in moderate and well drained soils
Place pipes flat with no slope
Size for 1/2" runoff maximum before outflow
In combination with stone bed can store more runoff

## APPLICATIONS

Under parking lots due to space considerations
Applicable where basins may be unsightly
Can oversize to control peak discharges by storing runoff

## ADVANTAGES

Commercially available
Takes little area
Out of sight
Groundwater recharge
Pollutant filtering
Reduce peak flows

## DISADVANTAGES

Cost
Difficult to restore infiltrative capacity if it fails
Difficult to monitor
Frequent cleaning of sediment traps required
Requires pretreatment

TOWN OF *NEWINGTON*

TYPICAL

Not to Scale

PLATE

# CATCH BASIN - DRYWELL COMBINATION

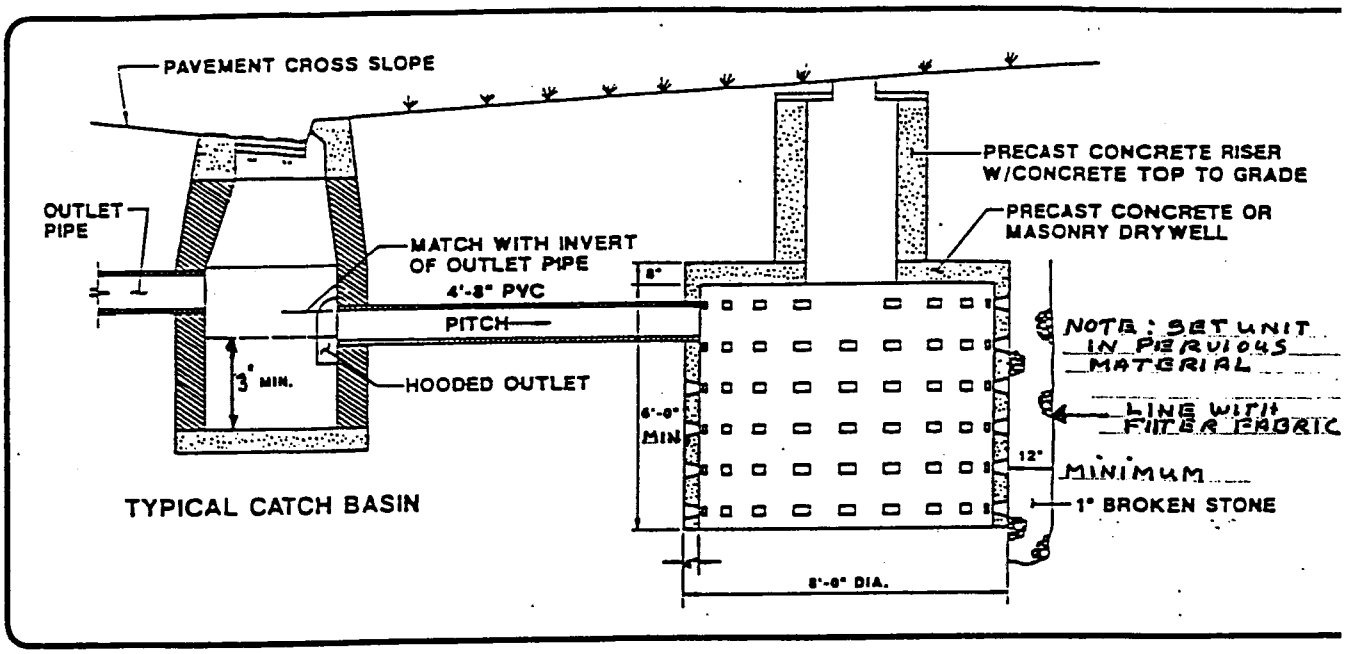


## DESIGN CRITERIA

Drywell must be located in soils with suitable infiltration capacity, hydrologic Groups A & B
Distance of 2 to 4 feet from drywell bottom to seasonally high groundwater required
Must pretreat runoff w/catch basin sump and hooded outlet to minimize clogging

## APPLICATIONS

Areas with moderate pollutant and hydrocarbon loads
Should be used in areas with well-draining soils to take advantage of infiltration
Suitable for minor residential roads and small parking lots

## ADVANTAGES

Maintains groundwater table and base flows
Renovates pollutants in first flush and frequent small storms
Reduces peak flows

## DISADVANTAGES

Inspect yearly
Cannot clean infiltration surface

TOWN OF NEWINGTON

TYPICAL

Not to Scale

PLATE

# INFILTRATION GALLEY W/ LEVEL SIDE OVERFLOW

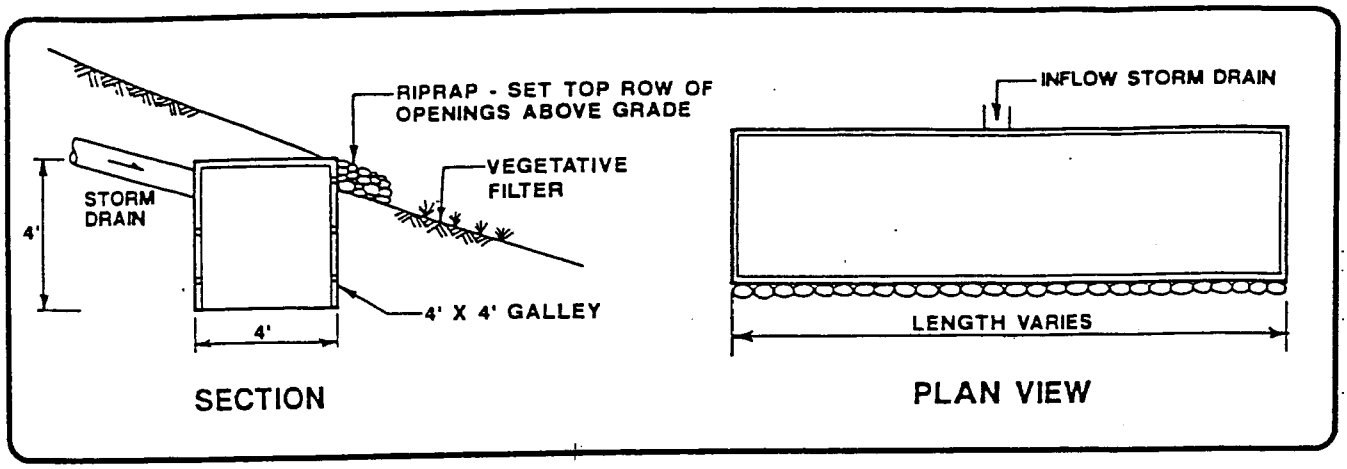


## DESIGN CRITERIA

Must be located in soils with suitable infiltrative capacity, hydrologic soil groups A and B
Distance of 2 to 4 feet from galley invert to seasonally high groundwater required
Pre-treat runoff through hooded catch basin with sump or sediment chamber

## APPLICATIONS

Serves as an outlet for small drainage systems
May be used for rooftop drainage
Parking lots, driveways, recreation areas

## ADVANTAGES

Infiltrates runoff from small storms
Excess overflows similar to level spreader and vegetative filter

## DISADVANTAGES

Runoff must be pre-treated to prevent clogging of soil

TOWN OF *NEWINGTON*

TYPICAL

Not to Scale

PLATE

# VEGETATIVE FILTER

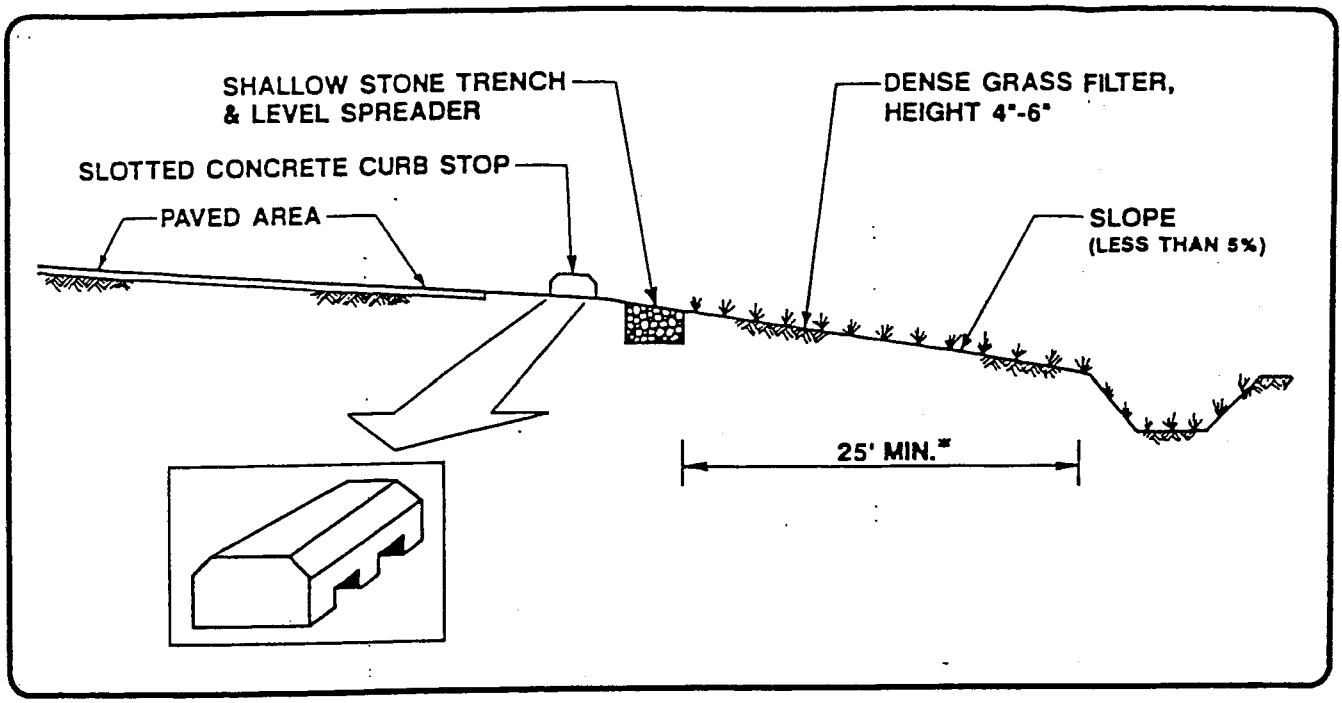


## DESIGN CRITERIA

Depth of water should not exceed grass height
Select vegetation via use of CT Guidelines for Sediment and Erosion Control and Appendix B
Serve a contributing area of 5 acres or less
Uniformly grade to avoid depressions or swales
Grass height should be 4" to 6"
Performance best on slopes less than 5%
Filters should receive only sheet flow
Minimum length of 25', 50' to 75' optimal plus 4 ' for each additional percent slope
Recommended in topsoils of loamy sand to silt loam
Combine with forested strips where possible
A longer strip length provides more filtration

## APPLICATIONS

Immediately abutting impervious surfaces
Downstream of level spreaders
Place in areas with high particulate loads, organics and metals
Pre-treatment for infiltrative systems

## ADVANTAGES

Reduces pollutant loads
Increases time of concentration
Protects soil from erosion
May double for aesthetic/recreational use
Can provide wildlife habitat

## DISADVANTAGES

Mowing maintenance
Channels formed from non-sheet flow may short-circuit filter
Periodic sediment accumulation at top of strip

TOWN OF *NEWINGTON*

TYPICAL

Not to Scale

PLATE

# RIPRAP CHECK DAM

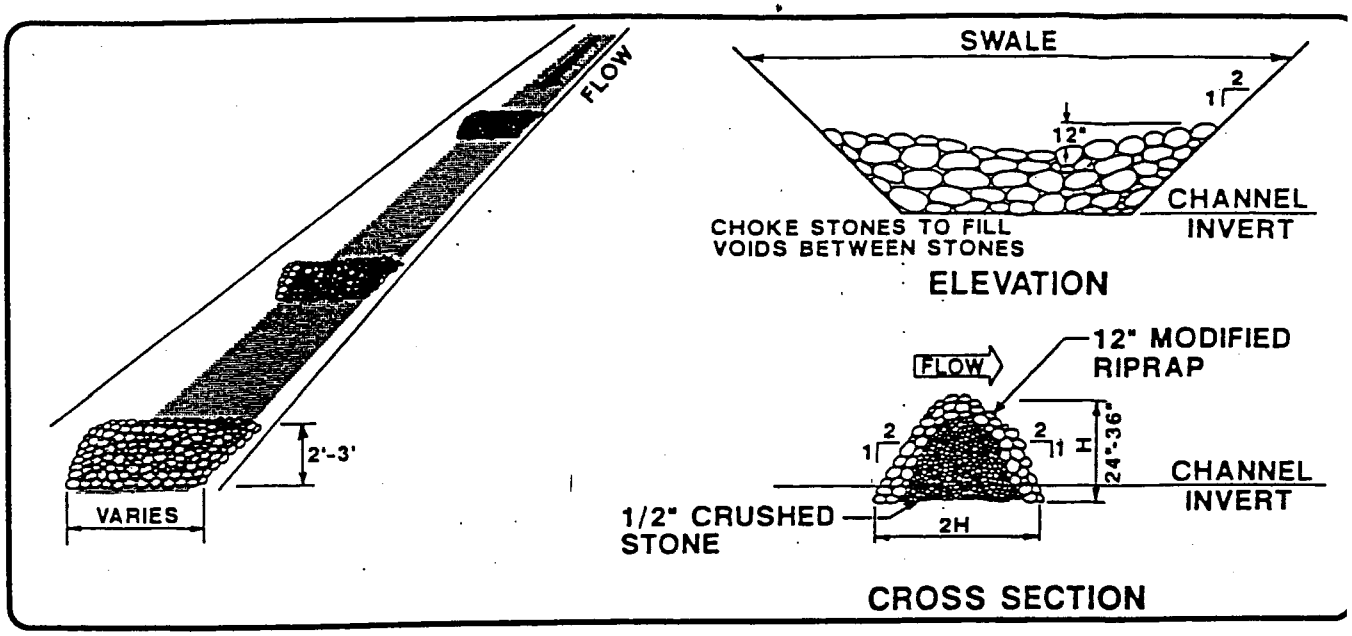


## DESIGN CRITERIA

Size to fit swale or channel dimensions
Size swale and dams to avoid overbank flows

## APPLICATIONS

Temporary or permanent measure for existing channels
Useful in new temporary or permanent drainage swales
Used to reduce velocity in grass swales

## ADVANTAGES

Acts to settle out coarse material
Delays runoff timing for small storms
Reduces velocity
Distributes water over channel
Increases infiltration in swales

## DISADVANTAGES

Maintenance/stone replacement
Must periodically remove accumulated sediments from behind dam

TOWN OF *NEWINGTON*

TYPICAL

Not to Scale

PLATE

# SEDIMENT BASIN OUTLET

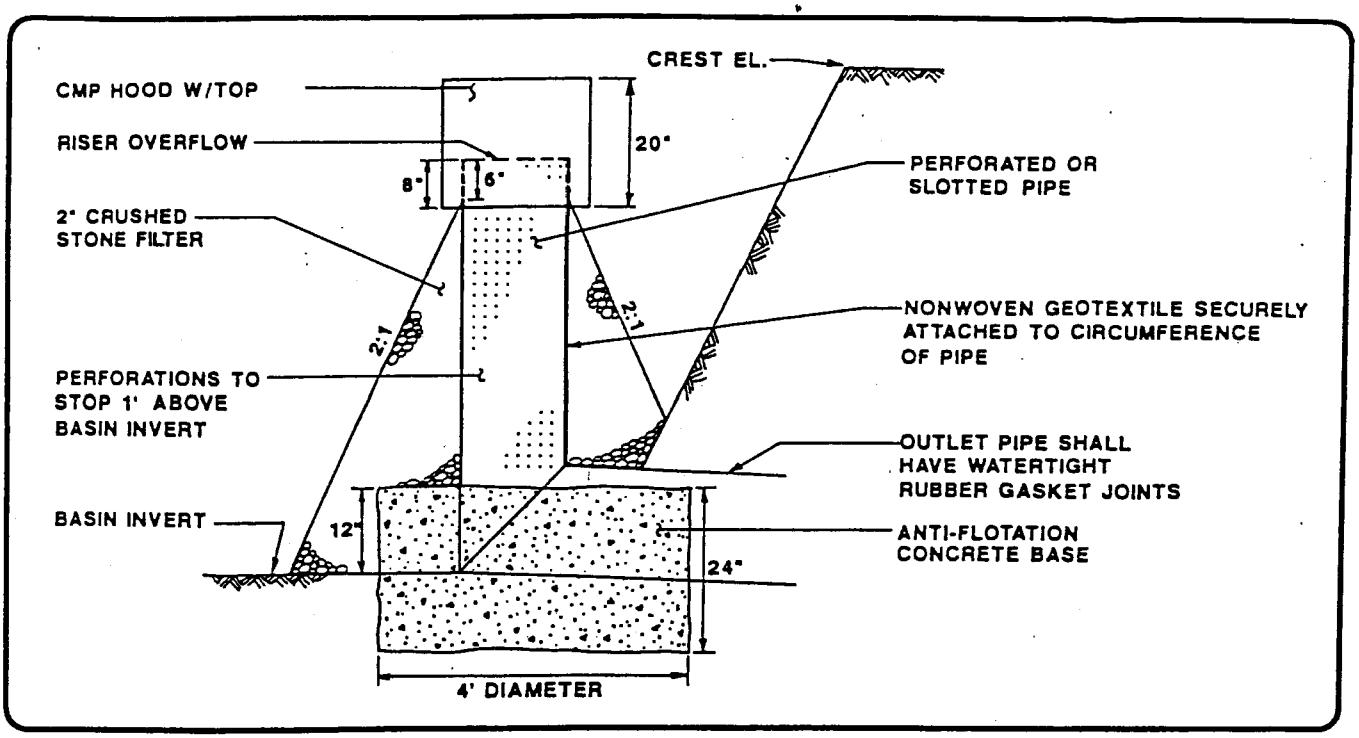


## DESIGN CRITERIA

Auxiliary spillway should be provided for high flows
May be used for settling basins or infiltration basins due to metered outlet
Provide hood to trap floatables

## APPLICATIONS

Sediment basins (temporary and permanent)
Infiltration basins
Ideal for off-line systems that capture small frequent storms

## ADVANTAGES

Hood traps floatables
Slow metered discharge encourages settling

## DISADVANTAGES

Does not accommodate high flows
Periodically clean stone filter

TOWN OF *NEWINGTON*

TYPICAL

Not to Scale

PLATE

# SEDIMENT BASIN

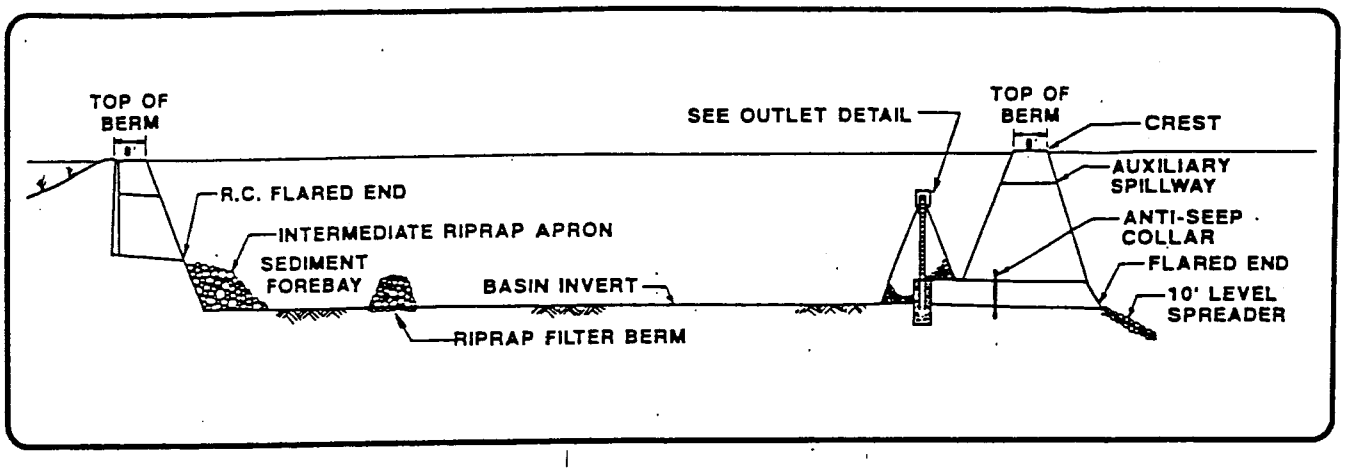


## DESIGN CRITERIA

Provide 2 to 4 feet to groundwater
Provide 4 feet to bedrock
Provide maintenance access
Provide auxiliary spillway outlet
Maximize length of basin and length from inlet to outlet
Utilize sediment forebay
Provide landscaped buffer at perimeter
Size to capture frequent storms (1/2")
Plant with dense growth of water-tolerant grass
Till bottom periodically and after maintenance
Pre-treat runoff
Functions best as an off-line system with large flows bypassing
3:1 maximum side slopes
Design basin floor with slope near zero

## APPLICATIONS

Parking lot systems
Temporary measure during construction
Permanent measure on large developments

## ADVANTAGES

Traps floatables
Traps coarse sediment
Groundwater recharge
Pollutant filtering

## DISADVANTAGES

Sediment removal required
Periodic inspection and maintenance required

TOWN OF *NEWINGTON*

TYPICAL

Not to Scale

PLATE

# INFILTRATION BASIN

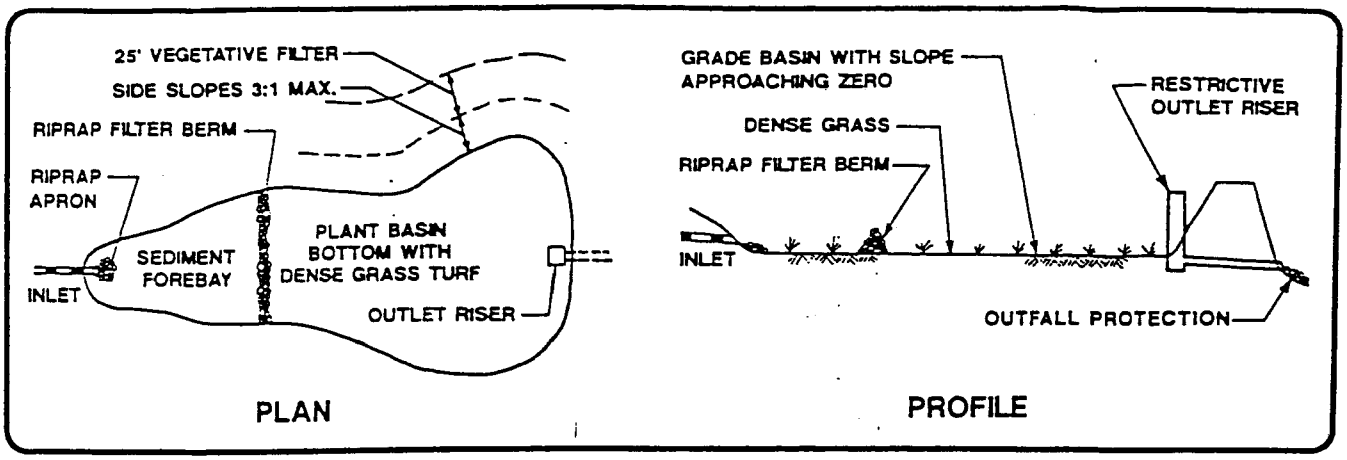


## DESIGN CRITERIA

Maximize surface area of basin floor
Pre-treat runoff to remove excess sediment load, floatables, and hydrocarbons
Route flow through entire length of basin
Prevent concentrated flow through basin, utilize sheet flow over entire width
Provide for flow control should basins infiltration fail
Utilize riprap apron at inlets
Utilize sediment forebay
Flat basin floor to promote uniform ponding
Side slopes should not exceed 3:1
Establish dense turf of water tolerant grass to maintain infiltration, trap pollutants, and uptake solubles
Basin should be tilled after final grading and periodically thereafter

Design for 3 day maximum draining time, 6 hour min.
Do not locate in fill soils
Perform test borings and permeability tests
Provide 4 feet minimum clearance to bedrock
Provide 2 to 4 ft clearance to seasonally high groundwater table
Locate a minimum 100 feet from drinking water wells
Locate a minimum 10 ft downgradient and 100 ft upgradient of foundations
Minimum infiltrative rate of 0.5 in/hr desired
Provide maintenance access
Provide a 25 ft vegetated buffer around the basin perimeter
Area should be protected during site construction to avoid soil compaction and raw sediment input
Basin should be mowed regularly , clippings removed

## VARIATIONS

1. A first flush basin where the first 1/2 inch of runoff is directed to the basin. All larger flows bypass. This provides more efficient pollutant removal.
2. Combination detention/infiltration basin whereby more frequent flows are detained to infiltrate with no outflow. Larger storms utilize the basin's volume to attenuate peak flows in conjunction with a controlled outlet.
3. Full infiltration basin whereby all design storms are fully detained and infiltrated. An emergency overflow system should be provided in case infiltration fails.

## APPLICATIONS

Commercial and large residential developments
Drainage areas of 5 to 50 acres
During construction, bottom should be left at 2 ft above final grade and used as a temporary sediment basin
Any site with well drained soils (hydrologic Groups A & B)
Should not be used in areas where contaminant spills are likely (industrial areas)

## ADVANTAGES

Removes soluble and particulate pollutants
Can control peak discharges
Can serve large drainage areas
Groundwater recharge
Preserves natural water balance
May be used as recreational space

## DISADVANTAGES

Fairly frequent maintenance
High failure rate due to poor soils and poor design
Infiltration rate may ultimately be determined by accumulated sediments

TOWN OF *NEWINGTON*

TYPICAL

# EXTENDED DURATION DETENTION BASIN

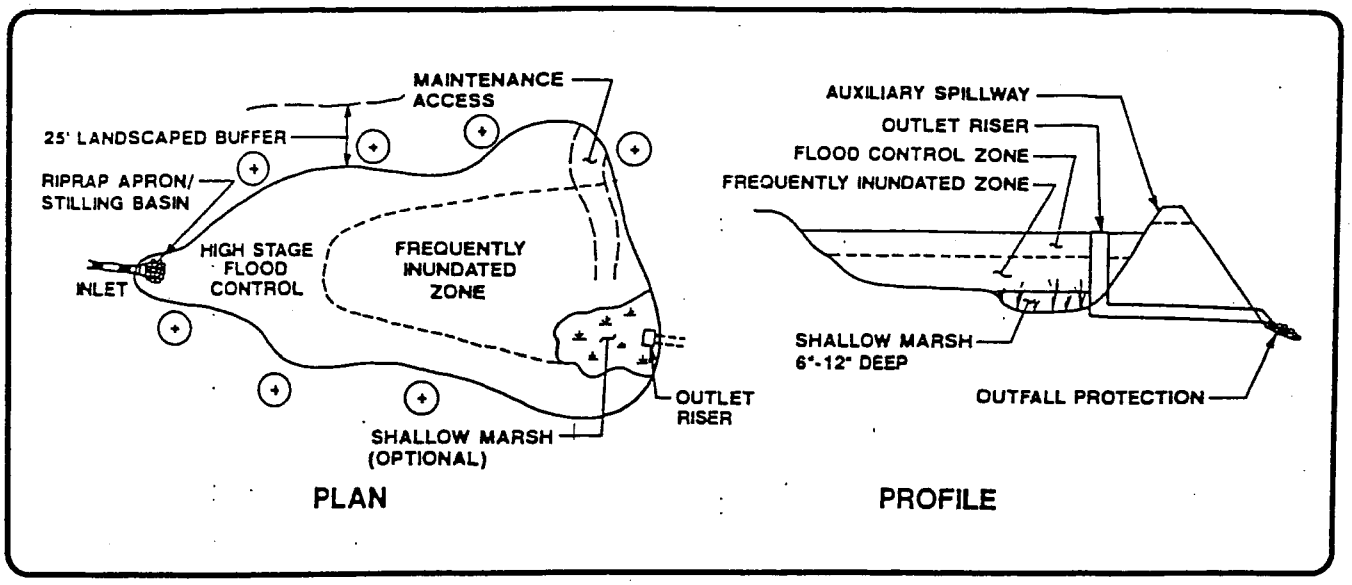


## DESIGN CRITERIA

Create optional small 6"-12" deep wet pool or marsh at riser outlet to treat soluble pollutants.
Utilize two-stage design to pass excessive flows and detain smaller, more frequent flows.
Design to control a range of storms.
Side slopes should not exceed 3:1
Capture first flush (1/2") volume minimum and release over 24 hours or longer.
Minimize distance between inlet and outlet.
Maximize length to emulate plug flow particulate settling
Install stilling basin or riprap apron to slow inlet velocities

The lower stage should be sized to accept the runoff from the mean storm event and structured to accept regular inundation.
The upper stage should be graded to drain quickly and only be inundated infrequently.
Locate preferably in B or C soils
Provide maintenance access
Provide 25' landscaped buffer/filter
Provide emergency low level outlet to drain wet pool
Basin should not intercept seasonally high watertable
For dry detention basins, provide perforated under-drain auxiliary outlet

## APPLICATIONS

Retrofit for existing dry basins
Large residential developments, commercial and industrial complexes
Regional control measure

## ADVANTAGES

Flood control
Particulate pollutant removal
Soluble pollutants removed with wet pool
Possible recreational use and habitat
Easy to retrofit old installations

## DISADVANTAGES

Ocassional nuisance in wet portion
Moderate maintenance
Sediment removal
Unattractive

TOWN OF *NEWINGTON*

TYPICAL

# Appendix B

## Stormwater Maintenance Declaration

# Stormwater Management Practices Maintenance Declaration

THIS DECLARATION is made this date, _____, 20_____ , by and between the Town of Newington, a municipal corporation with principal offices located at 101 Field Point Road, Newington, CT 06111 and

_____
[Owner(s) Name]

_____
[Address]

hereinafter referred to as "Owner(s)" of the property described below, in accordance with the *Low Impact Development and Stormwater Manual for the Town of Newington* as Amended, agrees to install and maintain stormwater management practice(s) on the subject property in accordance with approved plans and conditions. The Owner further agrees to the terms stated in this document to ensure that the stormwater management practice(s) continues serving the intended function in perpetuity. This Declaration includes the following exhibits:

> Exhibit A: Legal description of the real estate for which this Declaration applies ("Property").
>
> Exhibit B: Improvement Location Survey showing a location of the Property and an accurate location of each stormwater management practice affected by this Declaration.
>
> Exhibit C: Long-term Maintenance Plan that prescribes those activities that must be carried out to maintain compliance with this Declaration.
>
> Note: After construction has been verified and accepted by the Town of Newington for the stormwater management practices, an addendum(s) to this declaration shall be recorded by the Owner showing design and construction details and providing copies of the recorded document to the Town of Newington. The addendum may contain several additional exhibits.

Through this Declaration, the Owner(s) hereby subjects the Property to the following covenants, conditions, and restrictions:

1. The Owner(s), at its expense, shall secure from any affected owners of land all easements and releases of rights-of-way necessary for utilization of the stormwater practices identified in Exhibit B and shall record them with the Town Clerk. These easements and releases of rights-of-way shall not be altered, amended, vacated, released or abandoned without prior written approval of the Town of Newington.

2. The Owner(s) shall be solely responsible for the installation, maintenance and repair of the stormwater management practices, drainage easements and associated landscaping identified in Exhibit B in accordance with the Operation and Maintenance Plan (Exhibit C).

3. No alterations or changes to the stormwater management practice(s) identified in Exhibit B shall be permitted unless they are deemed to comply with this Declaration and are approved in writing by the Town of Newington.

4. The Owner(s) shall retain the services of a qualified inspector (as described in Exhibit C) to operate and ensure the maintenance of the stormwater management practice(s) identified in Exhibit B in accordance with the Operation and Maintenance Plan (Exhibit C).

5. The Owners(s) must maintain all records (logs, invoices, reports, data, etc.) and have them readily available for inspection at all times. Inspection Documentation must be maintained as frequently as required in Exhibit C.

6. The Town of Newington or its designee is authorized to access the property as necessary to conduct inspections of the stormwater management practices or drainage easements to ascertain compliance with the intent of this Declaration and the activities prescribed in Exhibit C. Upon written notification by the Town of Newington or their designee of required maintenance or repairs, the Owner(s) shall complete the specified maintenance or repairs within a reasonable time frame determined by the Town of Newington. The Owner(s) shall be liable for the failure to undertake any maintenance or repairs so that the public health, safety and welfare shall not be endangered.

7. If the Owner(s) does not keep the stormwater management practice(s) in reasonable order and condition, or complete maintenance activities in accordance with the Operation and Maintenance Plan contained in Exhibit C, or the required maintenance or repairs under 6 above within the specified time frames, the Town of Newington is authorized, but not required, to perform the specified inspections, maintenance or repairs in order to preserve the intended functions of the practice(s) and prevent the practice(s) from becoming a threat to public health, safety, general welfare or the environment. In the case of an emergency, as determined by the Town of Newington, no notice shall be required prior to the Town of Newington performing emergency maintenance or repairs. The Town of Newington may levy the costs and expenses of such inspections, maintenance or repairs plus a ten percent (10%) administrative fee against the Owner(s). The Town of Newington at the time of entering upon said stormwater management practice for the purpose of maintenance or repair may file a notice of lien upon the property affected by the lien. If said costs and expenses are not paid by the Owner(s), the Town of Newington may pursue the collection of same through appropriate court actions and in such a case, the Owner(s) shall pay in addition to said costs and expenses all costs of litigation, including attorney fees.

8. The Owner(s) hereby conveys to the Town of Newington an easement over, on and in the property described in Exhibit A for the purpose of access to the stormwater management practice(s) for the inspection, maintenance and repair thereof, should the Owner(s) fail to properly inspect, maintain and repair the practice(s). The Town of Newington's execution of any repair or maintenance does not alter the Owner(s) responsibility to maintain in future.

9. The Owner(s) agrees that this Declaration shall be recorded and that the land described in Exhibit "A" shall be subject to the covenants and obligations contained herein, and this Declaration shall bind all current and future owners of the property.

10. The Owner(s) agrees in the event that the Property is sold, transferred, or leased to provide information to the new owner, operator, or lessee regarding proper inspection, maintenance and repair of the stormwater management practice(s). The information shall accompany the first deed transfer and include Exhibits B and C and this Declaration. The transfer of this information shall also be required with any subsequent sale, transfer or lease of the Property.

11. The Owner(s) agree that the rights, obligations and responsibilities hereunder shall commence upon execution of the Declaration.

12. The parties whose signatures appear below hereby represent and warrant that they have the authority and capacity to sign this declaration and bind the respective parties hereto.

13. The Proprietor, its agents, representatives, successors and assigns shall defend, indemnify and hold the Town of Newington harmless from and against any claims, demands, actions, damages, injuries, costs or expenses of any nature whatsoever, hereinafter "Claims," fixed or contingent, known or unknown, arising out of or in any way connected with the design, construction, use, maintenance, repair or operation (or omissions in such regard) of the storm drainage system referred to in the permit as Exhibit "C" hereto, appurtenances, connections and attachments thereto which are the subject of this Declaration. This indemnity and hold harmless shall include any costs, expenses and attorney fees incurred by the Town of Newington in connection with such Claims or the enforcement of this Declaration.

IN WITNESS WHEREOF, the "Owner(s)" have executed this Declaration on this _____day of _____, 20_____.

By: _____
[Owner(s)]

By: _____
[Owner(s)]

STATE OF CONNECTICUT )
) ss: Newington
HARTFORD COUNTY )

The foregoing instrument was acknowledged before me on this_____ day of

_____, 20 _____, by _____, the
[Owner(s)]

"Owner(s)" of _____.
[Address]

_____
Notary Public

My Commission Expires On:

WHEN RECORDED RETURN COPY TO:
[All of the following departments involved in approval:
Planning & Zoning, Inland Wetlands & Watercourses Agency, and Building Division]

**Exhibit A – Legal Description**

**Exhibit B – Improvement Location Survey**

**Exhibit C – Operation and Maintenance Plan**

GRANT OF ENTRY
TO PERFORM CONTRUCTION AND MAINTENANCE FOR
STORMWATER DRAINAGE

KNOW ALL MEN BY THESE PRESENTS, that _____ ("Grantors"), the owners of the premises hereinafter described located at _____ in Newington, Connecticut shown in Schedule A attached, for the consideration of One and 00/100 Dollar ($1.00) and other good and valuable consideration received to their full satisfaction from the TOWN OF NEWINGTON ("Grantee"), a municipality of the State of Connecticut, with principal offices located at Town Hall, 131 Cedar Street, Newington, CT 06111-2644, do hereby grant and release to the said Grantee and to the said Grantee's successors and assigns forever, a right of entry to perform construction and maintenance for stormwater drainage as hereinafter provided:

The perpetual right, privilege and right of entry to the Grantee for stormwater drainage to lay, install , construct and to use, maintain, operate and repair a stormwater drainage line with catch basins, manholes, outlets and other appurtenances thereto to serve and to drain stormwater and stormwater runoff in and within an underground stormwater drainage pipe or line under and through that certain tract, piece or parcel of land of the Grantors situate, lying and being in the Town of Newington, Connecticut shown on the particular map or plan attached hereto as Schedule A entitled

_____

and on file in the office of the Town Clerk of Newington as Map No._____

The parties hereto agree that the grant of entry herein is a reconfiguration of existing drainage through the premises of the Grantors and is for the mutual benefit of the parties and shall therefore be done under the following conditions so that there is no assessment of damages or benefits to the Grantors by Grantee by the exercise of the rights granted herein:

1. Any area disturbed by the Grantee during the laying, installation and construction and use, maintenance and repair of the said storm line shall be restored by the Grantee to a condition reasonably equivalent to that which existed at the time immediately prior to such disturbance. Such corrections are to include restoration of pre-existing grades and repair of any driveways and pavement in the areas.

2. That the Grantors shall have the right, which is hereby reserved to itself, and to its successors and assigns forever, to continue to use the land within which the aforesaid stormwater drainage line has been granted for any landscaping, parking, and driveway purposes which shall not unreasonably interfere with the use thereof by the Grantee, or its successors or assigns, in fulfilling the purposes for which the foregoing grant of entry has been granted. Grantors for themselves, their successors and assigns covenant and agree that they will never construct or maintain any building or other structure on the premises of the Grantors shown in Schedule A except under the provisions of paragraph 9 hereof.

3. That in the exercise of the rights granted herein, the Grantee will take all reasonable measures to assure that all equipment and materials will be kept within twenty (20) feet on either side of the centerline of the said stormwater drainage line above described and not upon other land of the Grantors in the vicinity thereof, unless specifically authorized by the Grantors.

4. That during all periods of laying, installation, construction, maintenance arid repair for the said underground stormwater drainage line and said appurtenances to be placed in the stormwater drainage line hereinabove described, Grantee shall protect Grantors' lands adjacent to said stormwater drainage line by all reasonable means which may be required, such as the use of water runoff diversions and siltation fences, in order to prevent erosion, siltation or excessive runoff.

5. That the said underground stormwater drainage line to be installed under the right of entry granted herein shall be constructed and maintained in accordance with generally accepted

construction standards for underground stormwater drainage lines and shall be acceptable for such purpose by applicable standards on file with the Department of Public Works of the Grantee.

6. That the said Grantees shall not without prior notice to the Grantors, except in cases of emergency, the form and manner of such notice being reasonable suitable to the circumstances, enter upon the above-mentioned stormwater drainage area for the foregoing purposes in order to lay, install and construct and maintain and repair the underground stormwater drainage line and appurtenances thereto.

7. Grantee shall pay all costs related to the design and construction of the underground stormwater drainage line and said appurtenances related thereto.

8. The costs of the use, operation, maintenance and repair for the underground stormwater drainage line and said appurtenances for which foregoing right of entry has been granted shall be borne solely by the Grantee.

9. Grantors may on thirty (30) days' prior written notice to the Commissioner of Public Works of Grantee by certified mail relocate the drainage line granted herein at Grantors' sole cost and expense, if such relocation is reasonably necessary in connection with any future development of the premises of the Grantors shown in Schedule A. In such event, the covenants of the Grantee to the Grantors in paragraphs 1, 3, 4, 5, and 7 herein shall instead become covenants of the Grantors to the Grantee and no work or construction shall commence until plans for said relocation that have been prepared for Grantors by a licensed professional engineer have been furnished to and approved in writing by the Commissioner of Public Works of the Grantee. Upon completion of the relocation, an as-built survey mylar showing the relocated drainage line and all appurtenances thereto complying with Class A-2 and T-2 survey specifications shall be furnished by the Grantors to the Commissioner of Public Works of the Grantee.

This agreement shall be recorded in the land records of the Grantee and shall run with the land described herein. The benefits and the burdens of this grant of right of entry agreement shall inure to and be binding upon the Grantee and the Grantors hereunder and their respective successors and assigns forever to their own proper use and behoof.

IN WITNESSWHEREOF, Grantors and Grantee have hereunto caused this instrument to be signed and sealed this _____ day of _____ 20__.

Witnesses:

_____ By: _____

_____

Witnesses: TOWN OF NEWINGTON

_____ By: _____

_____

STATE OF CONNECTICUT )
) ss. Newington
HARTFORD COUNTY )

Personally appeared, _____, to me know and known by me to be the signer and sealer of the foregoing instrument, and he acknowledged the same to be his free act and deed this _____ day of _____ 20__.

_____
Notary Public
Commissioner of Superior Court

STATE OF CONNECTICUT )
) ss. Newington
HARTFORD COUNTY )

Personally appeared, _____, to me know and known by me to be the signer and sealer of the foregoing instrument, and he acknowledged the same to be his free act and deed this _____ day of _____ 20__.

_____
Notary Public
Commissioner of Superior Court

# Appendix C

## UNHSC Design Specifications for Porous Asphalt Pavement and Infiltration Beds

UNIVERSITY OF NEW HAMPSHIRE
STORMWATER CENTER

# UNHSC Design Specifications for Porous Asphalt Pavement and Infiltration Beds

**Rev. October 2009**

**University of New Hampshire Stormwater Center (UNHSC)**
Gregg Hall ● 35 Colovos Road ● Durham, New Hampshire 03824-3534 ● http://www.unh.edu/erg/cstev

# UNHSC DESIGN SPECIFICATIONS FOR POROUS ASPHALT PAVEMENT AND INFILTRATION BEDS

## TABLE OF CONTENTS


PART 1 GENERAL ..... 5
1.1 DESCRIPTION ..... 5
1.2 SUBMITTALS ..... 5
1.3 QC/QA ..... 6
1.4 PROJECT CONDITIONS ..... 6
1.5 REFERENCES ..... 7
PART 2 PRODUCTS ..... 8
2.1 MATERIALS ..... 8
A. Porous Media Infiltration Beds ..... 8
1. Choker Course ..... 8
2. Filter course material ..... 8
3. Filter blanket material ..... 9
4. Reservoir Coarse ..... 9
5. Optional Bottom Liner ..... 9
6. Non-woven geotextile filter fabric ..... 11
7. Alternative Applications and Residential Driveways. ..... 11
B. Porous Asphalt Mix ..... 12
1. Mix materials ..... 12
2. Polymer Modified PGAB and Mix Designs. ..... 12
3. Anti-Stripping Mix Additives. ..... 14
4. Coarse Aggregate ..... 15
5. Fine Aggregate ..... 15
6. Porous Asphalt Mix Design Criteria ..... 15
C. Porous Asphalt Mix Production ..... 16
1. Mixing Plants. ..... 16
2. Preparation of Asphalt Binder. ..... 16
3. Preparation of Aggregates. ..... 17
4. Mineral filler ..... 17
5. Mixing ..... 17
6. QC/QA During Production ..... 17
7. Plant Shutdown and Rejection of Mix. ..... 18
8. Striping Paint ..... 19
PART 3 EXECUTION ..... 19
3.1 INSTALLATION ..... 19
A. Porous Media Beds ..... 19
1. Grade Control ..... 19
2. Subgrade Preparation ..... 19
3. Porous Media Bed Installation ..... 20
4. QC/QA requirements for Porous Media Bed Construction. ..... 21

## TABLE OF CONTENTS (CONTINUED)

B. Porous Asphalt Pavement Installation ..... 21
1. Mixing Plant ..... 21
2. Hauling Equipment. ..... 21
3. Placing Equipment. ..... 22
4. Rollers. ..... 22
5. Conditioning of Existing Surface. ..... 23
6. Temperature Requirements. ..... 23
7. Spreading and Finishing. ..... 23
8. Compaction. ..... 24
9. Joints. ..... 25
10. Surface Tolerances ..... 26
11. Repair of Damaged Pavement. ..... 26
12. Striping Paint ..... 26
C. QC/QA for Paving Operations ..... 26
PART 4. REFERENCES ..... 27

## LIST OF TABLES

Table 1. Submittal requirements. ..... 6
Table 2. Gradations and compaction of choker, filter, and reservoir course materials. ..... 11
Table 3. Non-woven geotextile filter fabric properties. ..... 12
Table 4. Post-Blended SBR Binder QC Plan requirements. ..... 14
Table 5: Porous Asphalt Mix Design Criteria. ..... 16
Table 6. QC/QA testing requirements during production. ..... 18
Table 7. QC/QA testing tolerances during production. ..... 18
Table 8. QC/QA requirements for porous media bed construction. ..... 21
Table 9. QC/QA requirements during paving ..... 27

## LIST OF FIGURES

Figure 1: Typical Cross-Section for Pervious Pavement System ..... 10

# UNHSC DESIGN SPECIFICATIONS FOR POROUS ASPHALT PAVEMENT AND INFILTRATION BEDS

## NOTICE

The specifications listed herein were developed by the UNHSC for UNHSC related projects and represent the author's best professional judgment. No assurances are given for projects other than the intended application. These design specifications are not a substitute for licensed, qualified engineering oversight and should be reviewed, and adapted as necessary.


## ACKNOWLEDGEMENTS

The original 2007 specifications were completed by collaboration between the University of New Hampshire, of Durham, New Hampshire, and Pike Industries Inc., of Belmont, New Hampshire. The principal UNH authors were Joshua F. Briggs, Robert M. Roseen, PE, PhD, and Thomas P. Ballestero, PE, PhD, PH, CGWP, PG. The principal author from Pike Industries was the Corporate Quality Control Manager, Jeff Pochily. Other contributions to the project were made by Grant Swenson, also of Pike Industries. The revised specifications (2009) were prepared by the UNHSC after a round table discussion with New Hampshire Asphalt Manufacturers (Rick Charbonneau, Mark Charbonneau, and Keith Dane of Continental Paving, Jeff Lewis of Brox Industries, and Mary Wescott, Dave Duncan, and Jeff Pochily of Pike Industries) and a round table discussion with design engineers. The 2009 specifications were also reviewed and revised by Antonio P. Ballestero, Jr., PE.

The UNH Stormwater Center is housed within the Environmental Research Group (ERG) at the University of New Hampshire (UNH) in Durham, New Hampshire. Funding for the program was and continues to be provided by the Cooperative Institute for Coastal and Estuarine Environmental Technology (CICEET) and the National Oceanic and Atmospheric Administration (NOAA).

## PART 1 GENERAL

### 1.1 DESCRIPTION

A. This specification is intended to be used for porous asphalt pavement in parking lot applications. Stormwater management functions of porous asphalt installations include water quality treatment, peak flow reduction, storm volume reduction via groundwater recharge, and increased hydrograph time lag. This specification is intended for a cold climate application based upon the field experience at the UNHSC porous asphalt parking lot located in Durham, New Hampshire, however the specification can be adapted to projects elsewhere provided that selection of materials and system design reflects local conditions, constraints, and objectives.

B. The work of this Section includes subgrade preparation, installation of the underlying porous media beds, and porous asphalt mix (mix) design, production, and installation. Porous media beds refer to the material layers underlying the porous asphalt pavement. Porous asphalt pavement refers to the compacted mix of modified asphalt, aggregate, and additives.

C. The porous asphalt pavement specified herein is modified after the National Asphalt Pavement Association (NAPA) specification outlined in *Design, Construction, and Maintenance Guide for Porous Asphalt Pavements, Information Series 131* (2003) and *Design, Construction, and Maintenance of Open-Graded Friction Courses, Information Series 115* (2002).

D. Alternative specifications for mix, such as Open Graded Friction Courses (OGFC) from Federal Agencies or state Departments of Transportation (DOT), may be used if approved by the Engineer. The primary requirements for the specifications of the mix are performance grade (PG) asphalt binder, binder content, binder draindown, aggregate gradation, air void content, retained tensile strength (TSR).

### 1.2 SUBMITTALS

A. Submit a list of materials proposed for work under this Section including the name and address of the materials producers and the locations from which the materials are to be obtained.

B. Submit certificates, signed by the materials producers and the relevant subcontractors, stating that materials meet or exceed the specified requirements, for review and approval by the Engineer.

C. Submit samples of materials for review and approval by the Engineer. For mix materials, samples may be submitted only to the QA inspector with the Engineer's approval.

*D.* Submittal requirements for samples and certificates are summarized in 1.3 QC*/QA*

A. Use adequate numbers of skilled workers who are thoroughly trained and experienced in the necessary crafts and who are completely familiar with the specified requirements and the methods needed for proper performance of the work in this section.

B. Codes and Standards - All materials, methods of construction and workmanship shall conform to applicable requirements of AASHTO ASTM Standards, NHDOT Standard Specifications for

Road and Bridge Construction, latest revised (including supplements and updates), or other standards as specified.

C. QC/QA requirements for production of mix are discussed in the Materials section, and for construction of the porous media beds and paving in the Execution section.

E. Table 1 and discussed in further detail in the Materials section.

## 1.3 QC/QA

D. Use adequate numbers of skilled workers who are thoroughly trained and experienced in the necessary crafts and who are completely familiar with the specified requirements and the methods needed for proper performance of the work in this section.

E. Codes and Standards - All materials, methods of construction and workmanship shall conform to applicable requirements of AASHTO ASTM Standards, NHDOT Standard Specifications for Road and Bridge Construction, latest revised (including supplements and updates), or other standards as specified.

F. QC/QA requirements for production of mix are discussed in the Materials section, and for construction of the porous media beds and paving in the Execution section.

**Table 1. Submittal requirements.**

| Material or Pavement Course* | Properties to be reported on Certificate** |
|---|---|
| choker course, reservoir course | gradation, max. wash loss, min. durability index, max. abrasion loss, air voids (reservoir course) |
| filter course | gradation, permeability/ sat. hydraulic conductivity |
| filter blanket | gradation |
| geotextile filter fabric | manufacturer's certification, AOS/EOS, tensile strength |
| striping paint | certificate |
| binder | PGAB certification |
| coarse aggregate | gradation, wear, fracture faces (fractured and elongated) |
| fine aggregate | gradation, |
| silicone | manufacturer's certification |
| Fibers (optional) | manufacturer's certification |
| mineral filler (optional) | manufacturer's certification |
| fatty amines (optional anti-strip) | manufacturer's certification |
| hydrated lime (optional anti-strip) | manufacturer's certification |

* Samples of each material shall be submitted to the Engineer (or QA inspector for mix). These samples must be in sufficient volume to perform the standardized tests for each material.
** At a minimum, more material properties may be required (refer to Materials Section).

## 1.4 PROJECT CONDITIONS

A. Site Assessment should be performed per the steps outlined in *IS 131* (NAPA, 2003).

B. Construction Phasing should be performed as outlined in IS 131 (NAPA, 2003).

C. Protection of Existing Improvements
   1. Protect adjacent work from the unintended dispersal/splashing of pavement materials. Remove all stains from exposed surfaces of pavement, structures, and grounds. Remove all waste and spillage. If necessary, limit access to adjacent work/structures with appropriate signage and/or barriers.
   2. Proper erosion and sediment control practices shall be provided in accordance with existing regulations. Do not damage or disturb existing improvements or vegetation. Provide suitable protection where required before starting work and maintain protection throughout the course of the work. This includes the regular, appropriate inspection and maintenance of the erosion and sediment control measures.
   3. Restore damaged areas, including existing pavement on or adjacent to the site that has been damaged as a result of construction work, to their original condition or repair as directed to the satisfaction of the Engineer at no additional cost.

D. Safety and Traffic Control
   1. Notify and cooperate with local authorities and other organizations having jurisdiction when construction work will interfere with existing roads and traffic.
   2. Provide temporary barriers, signs, warning lights, flaggers, and other protections as required to assure the safety of persons and vehicles around and within the construction area and to organize the smooth flow of traffic.

E. Weather Limitations
   1. Porous asphalt, Open graded friction course, or dense-mixed asphalt shall not be placed between November 15 and March 15, or when the ambient air temperature at the pavement site in the shade away from artificial heat is below 16 °C (60 °F) or when the actual ground temperature is below 10 °C (50 °F). Only the Engineer may adjust the air temperature requirement or extend the dates of the pavement season.
   2. The Contractor shall not pave on days when rain is forecast for the day, unless a change in the weather results in favorable conditions as determined by the Engineer.

## 1.5 REFERENCES


A. *General Porous Asphalt Bituminous Paving and Groundwater Infiltration Beds,* specification by UNH Stormwater Center, February, 2005.
B. *Design, Construction, and Maintenance Guide for Porous Asphalt Pavements, Information Series 131*, National Asphalt Pavement Association (NAPA), 2003.
C. *Design, Construction, and Maintenance of Open-Graded Friction Courses, Information Series 115*, NAPA, 2002.
D. *Annual Book of ASTM Standards,* American Society for Testing and Materials, Philadelphia, PA, 1997 or latest edition.
E. *Standards of the American Association of State Highway and Transportation Officials* (AASHTO), 1998 or latest edition.
F. *Section 401- Plant Mix Pavements – General*, in *Standard Specifications for Road and Bridge Construction – State of New Hampshire Department of Transportation*, 2006.
G. *Section 02725 - General Porous Pavement and Groundwater Infiltration Beds*, specification from NAPA Porous Asphalt Seminar handout, Cahill Associates, Inc., 2004.
H. *Correlations of Permeability and Grain Size*, Russell G. Shepherd, Groundwater 27 (5), 1989.

I. *Groundwater*, R. Allan Freeze and John A. Cherry, 1979.

## PART 2 PRODUCTS

## 2.1 MATERIALS

### A. Porous Media Infiltration Beds

Below the porous asphalt itself are located the porous media infiltration beds (Figure 1), from top to bottom: a 4" – 8 "(10 - 20 cm) (minimum) thick layer of choker course of crushed stone (8" is preferable to alleviate compaction issues with the porous asphalt); an 8" to 12" (20 cm to 30 cm) minimum thickness layer of filter course of poorly graded sand (a.k.a. bankrun gravel or modified 304.1); 3" (8 cm) minimum thickness filter blanket that is an intermediate setting bed (pea gravel); and a reservoir course of crushed stone, thickness dependant on required storage and underlying native materials. Alternatively, the pea gravel layer could be thickened and used as the reservoir course depending upon subsoil suitability. This alternative simplifies subbase construction. For lower permeability native soils, perforated or slotted drain pipe is located in the stone reservoir course for drainage. This drain pipe can be daylighted to receiving waters or connected into other stormwater management infrastructure (wetland, storm sewer, etc.). The fine gradation of the filter course is for enhanced filtration and delayed infiltration. The high air void content of the uniformly graded crushed stone reservoir course: maximizes storage of infiltrated water thereby allowing more time for water to infiltrate between storms; and creates a capillary barrier that arrests vertical water movement and in doing so prevents winter freeze-thaw and heaving. The filter blanket is placed to prevent downward migration of filter course material into the reservoir course. The optional underdrain in the reservoir course is for hydraulic relief (typically raised off of the bottom of the reservoir stone layer for enhanced groundwater recharge). Nonwoven geotextile filter fabric (geotextile) is used only for stabilizing the sloping sides of the porous asphalt system excavation and not to be used on the bottom of the system unless needed for structural reasons.

1. <u>Choker Course</u>

   Material for the choker course and reservoir course shall meet the following:

   Maximum Wash Loss of 0.5%
   Minimum Durability Index of 35
   Maximum Abrasion Loss of 10% for 100 revolutions, and maximum of 50% for 500 revolutions.

Material for the choker course and reservoir course shall have the AASHTO No. 57 and AASHTO No. 3 gradations, respectively, as specified in

**Table 2**. If the AASHTO No. 3 gradation cannot be met, AASHTO No. 5 is acceptable with approval of the Engineer. AASHTO no. 3 is also suitable for the choker course.

2. Filter course material

Filter course material shall have a hydraulic conductivity (also referred to as coefficient of permeability) of 10 to 60 ft/day at 95% standard proctor compaction unless otherwise approved by the Engineer. Great care needs to be used to not over compact materials. Over-compaction results with loss of infiltration capacity. The filter course material is commonly referred to as a bankrun gravel (modified NHDOT 304.1). In order to select an appropriate gradation, coefficient of permeability may be estimated through an equation that relates gradation to permeability, such as described in *Correlations of Permeability and Grain Size* (Shepherd, 1989) or in *Section 8.7 Estimation of Saturated Hydraulic Conductivity* (Freeze and Cherry, 1979). The hydraulic conductivity should be determined by ASTM D2434 and reported to the Engineer.

3. Filter blanket material

Filter blanket material between the filter course and the reservoir course shall be an intermediate size between the finer filter course above, and the coarser reservoir course below, for the purpose of preventing the migration of a fine setting bed into the coarser reservoir material. An acceptable gradation shall be calculated based on selected gradations of the filter course and reservoir course using criteria outlined in the *HEC 11* (Brown and Clyde, 1989). A pea-gravel with a median particle diameter of 3/8" (9.5 mm) is commonplace.

4. Reservoir Coarse

Reservoir Coarse thickness is dependent upon the following criteria (that vary from site to site):

a. A 4" (10 cm) minimum thickness of reservoir course acts as a capillary barrier for frost heave protection. The reservoir course is located at the interface between subbase and native materials.

b. 4-in. (10 cm) minimum thickness if the underlying native materials are either well drained (Hydrologic Group A soils).

c. 8-in. (30 cm) minimum thickness if subdrains are installed. Subdrains insure that the subbase is well drained

d. Subdrains, if included, are elevated a minimum of 4" (10 cm) from the reservoir course bottom to provide storage and infiltration for the water quality volume. If the system is lined ,

e. Subbase thickness is determined from subbase materials having sufficient void space to store the design storm,

> **Example:** If the 25-year storm is 5.1" (13 cm) of rainfall depth, and the reservoir void space is 30%, then the minimum subbase thickness = 5.1"/0.3 = 17" (43.2 cm).

f. Pavement system and subbase thickness are $\geq$ 0.65 * design frost depth for area.

**Example:** Durham, New Hampshire, 48" (122 cm) = $D_{maximum\ frost}$, therefore the *minimum* depth to the bottom of the subbase = 0.65(48") = 32" (81 cm).

5. Optional Bottom Liner

Bottom Liner is only recommended for aquifer protection or infiltration prevention. This liner is to be located at the interface between subbase and native materials and is dependent upon the following:

a. As with any infiltration system, care must be taken when siting porous asphalt systems close to locations where hazardous materials are handled/trafficked, or where high contaminant loading may threaten groundwater, or where infiltration is undesirable (nearby foundations, slope stability, etc.). In such cases, the systems can be lined to prevent infiltration yet still preserving water quality, hydrograph lag, and peak flow reduction benefits.

b. Refer to state or USEPA guidelines regarding the use of infiltration systems (USEPA, 1999, CalTrans, 2003, WI DNR, 2004, USEPA, 2004)

c. Suitable liners may include Hydrologic Group D soils, HDPE liners, or suitable equivalent. Refer to state or USEPA guidelines regarding selection of impermeable liners (USEPA, 2004).

d. Filter fabrics or geotextile liners are not recommended for use on the bottom of the porous asphalt system (at the base of the stone reservoir subbase) if designing for infiltration. Filter fabric usage in stormwater filtration has been known to clog prematurely. Graded stone filter blankets are recommended instead.

e. Geotextile filter fabrics may be used if designing on poor structural, and low conductivity soils. Fabric usage would be limited to the bottom and sides of the excavation. No fabric is to be used within the subbase, only on the perimeter.

**Figure 1: Typical Parking Area Cross-Section for Pervious Pavement System**

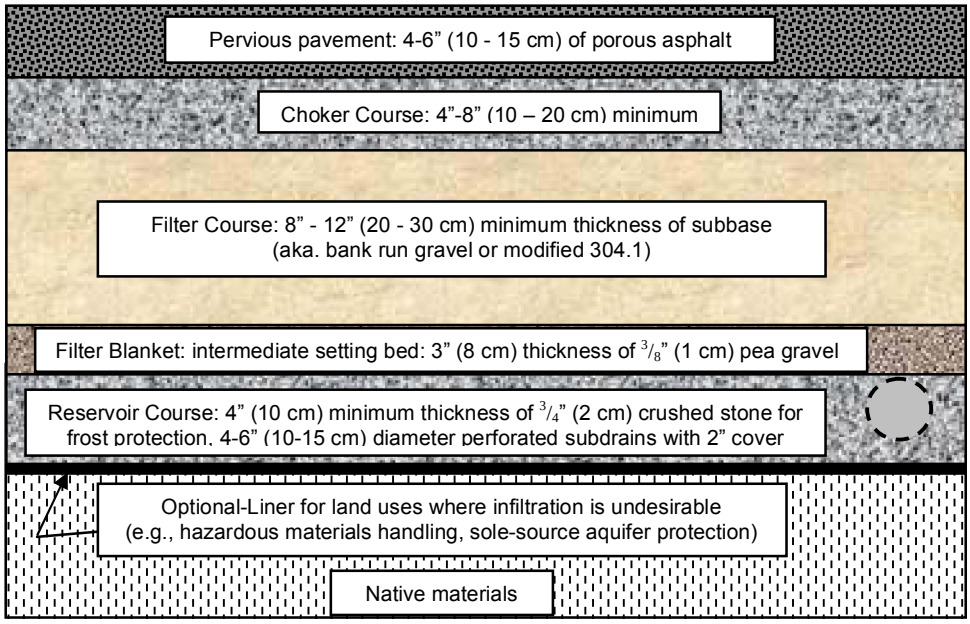
Pervious pavement: 4-6” (10 - 15 cm) of porous asphalt
Choker Course: 4”-8” (10 – 20 cm) minimum
Filter Course: 8” - 12” (20 - 30 cm) minimum thickness of subbase
(aka. bank run gravel or modified 304.1)
Filter Blanket: intermediate setting bed: 3” (8 cm) thickness of 3/8” (1 cm) pea gravel
Reservoir Course: 4” (10 cm) minimum thickness of 3/4” (2 cm) crushed stone for
frost protection, 4-6” (10-15 cm) diameter perforated subdrains with 2” cover
Optional-Liner for land uses where infiltration is undesirable
(e.g., hazardous materials handling, sole-source aquifer protection)
Native materials

**Table 2. Gradations and compaction of choker, filter, and reservoir course materials.**

| US Standard Sieve Size<br><br>Inches/mm | Percent Passing (%) | | | |
|---|---|---|---|---|
| | Choker Course (AASHTO No. 57) | Filter Course (Modified NHDOT 304.1) | Reservoir Course (AASHTO No. 3) | Reservoir Course Alternative* (AASHTO No. 5) |
| 6/150 | - | 100 | - | |
| 2½/63 | - | | 100 | - |
| 2 /50 | - | | 90 – 100 | - |
| 1½/37.5 | 100 | | 35 – 70 | 100 |
| 1/25 | 95 - 100 | | 0 – 15 | 90 – 100 |
| ¾/19 | - | | - | 20 - 55 |
| ½/12.5 | 25 - 60 | | 0 - 5 | 0 - 10 |
| 3/8/9.5 | - | | - | 0 - 5 |
| #4/4.75 | 0 - 10 | 70-100 | - | |
| #8/2.36 | 0 - 5 | | - | |
| #200/0.075 | | 0 – 6** | | |
| % Compaction ASTM D698 / AASHTO T99 | 95 | 95 | 95 | 95 |

* Alternate gradations (e.g. AASHTO No. 5) may be accepted upon Engineer's approval.
** Preferably less than 4% fines

6. <u>Non-woven geotextile filter fabric</u>

Filter fabric is *only recommended* for the sloping sides of the porous asphalt system excavation. It shall be Mirafi 160N, or approved equal and shall conform to the specifications in

Table 3. Mirafi ® 160N is a non-woven geotextile composed of polypropylene fibers, which are formed into a stable network such that the fibers retain their relative position. 160N is inert to biological degradation and resists naturally encountered chemicals, alkalis, and acids.

7. Alternative Applications and Residential Driveways.

The recommendations above are based on a commercial parking application for both traffic and contaminant load. Alternative applications such as residential driveways and low use applications may justify the use of alternative subbase thicknesses for the porous media beds, filter blanket, and geotextiles. Residential driveway applications have been designed with a subbase limited to only an 8" compacted choker course. Variations should consider structural load requirements for material thickness, and contaminant load for filter course thickness. A reduced total system thickness (Section 2.1.3.f) will subject the pavement to greater freeze thaw susceptibility.

**Table 3. Non-woven geotextile filter fabric properties.**

| Mechanical Properties | Test Method | Unit | Minimum Average Roll Values | |
|---|---|---|---|---|
| | | | MD* | CD** |
| Grab Tensile Strength | ASTM D 4632 | kN (lbs) | 0.71 (160) | 0.71 (160) |
| Grab Tensile Elongation | ASTM D 4632 | % | 50 | 50 |
| Trapezoid Shear Strength | ASTM D 4533 | kN (lbs) | 0.27 (60) | 0.27 (60) |
| Mullen Burst Strength | ASTM D 3786 | kPa (psi) | 2100 (305) | 2100 (305) |
| Puncture Strength | ASTM D 4833 | kN (lbs) | 0.42 (95) | 0.42 (95) |
| Apparent Opening Size (AOS) | ASTM D 4751 | mm (US Sieve) | 0.212 (70) | 0.212 (70) |
| Permittivity | ASTM D 4491 | $sec^{-1}$ | 1.4 | 1.4 |
| Permeability | ASTM D 4491 | cm/sec | 0.22 | 0.22 |
| Flow Rate | ASTM D 4491 | $lpm/m^2$ ($gpm/ft^2$) | 4,477 (110) | 4,477 (110) |
| UV Resistance (at 500 hours) | ASTM D 4355 | % strength retained | 70 | 70 |

| Physical Properties | Test Method | Unit | Typical Value |
|---|---|---|---|
| Weight | ASTM D 5261 | $g/m^2$ ($oz/yd^2$) | 217 (6.4) |
| Thickness | ASTM D 5199 | mm (mils) | 1.9 (75) |
| Roll dimension (width x length) | | m (ft) | 4.5 x 91 (15 x 300) |
| Roll area | | $m^2$ ($yd^2$) | 410 (500) |
| Estimated roll weight | | kg (lb) | 99 (217) |

*MD - Machine Direction; **CD - Cross-machine Direction

## B. Porous Asphalt Mix

1. Mix materials

Mix materials consist of modified performance grade asphalt binder (PGAB), coarse and fine aggregates, and optional additives such as silicone, fibers, mineral fillers, fatty amines, and hydrated lime. Materials shall meet the requirements of the NAPA's Design, Construction, and Maintenance of Open-Graded Friction Courses, Information Series 115 (2002), except where noted otherwise below or approved in writing by the Engineer.

2. Polymer Modified PGAB and Mix Designs.

The asphalt binder shall be a polymer and/or fiber modified Performance Graded asphalt binder (PGAB) used in the production of Superpave Hot Mix Asphalt (HMA) mixtures. Ideally for maximum durability, the PGAB shall be two grades stiffer than that required for dense mix asphalt (DMA) parking lot installations, which is often achieved by adding a polymer and/or fiber. Mix designs will meet or exceed criteria listed in Table 5

The PGAB polymer modifiers are to be either styrene butadiene rubber (SBR) or styrene butadiene styrene (SBS). SBS is typically reserved for large projects as terminal pre-blending is required. SBR is feasible for smaller projects as it can be blended at the plant or terminal blended. The quantity of rubber solids in the SBR shall typically be 1.5-3% by weight of the bitumen

content of the mix.

The dosage of fiber additives shall be either 0.3 percent cellulose fibers or 0.4 percent mineral fibers by total mixture mass. Fibers are a simple addition either manually for a batch plant or automated for larger drum plants. The binder shall meet the requirements of AASHTO M320.

The PGAB may be pre-blended or post-blended. The pre-blended binder can be pre-blended at the source or at a terminal. For post-blended addition, the modifier can either be in-line blended or injected into the pugmill at the plant.

The following asphalt mix designs are recommended:

a. PG 64-28 with 5 pounds of fibers per ton of asphalt mix. This mix is recommended for smaller projects with lower traffic counts or loading potential. This mix is manageable at common batch plants.
b. Pre-Blended PG 64-28 SBS with 5 pounds of fibers per ton of asphalt mix. This mix is recommended for large projects > 1acre where high durability pavements are needed. The SBS will be supplied by an approved PGAB supplier holding a Quality Control Plan approved by the state DOT. A Bill of Lading (BOL) will be delivered with each transport of PG 64-28 SBS. A copy of the BOL will be furnished to the QA inspector at the Plant.

c. Post-Blended PG 64-28 SBR with 5 pounds of fibers per ton of asphalt mix. This mix is recommended for projects where high durability pavements are needed. The SBR will be supplied by a HMA plant approved to perform in-line blending or blending by injection into the pugmill. A Post-Blended SBR Binder Quality Control Plan (Table 4) will be submitted to the Engineer for approval at least 10 working days prior to production.

d. Pre-Blended PG 76-22 modified with SBS and 5 pounds of fibers per ton of asphalt mix. This mix is recommended for large sites anticipating high wheel load (H-20) and traffic counts for maximum durability. The SBS will be supplied by an approved PGAB supplier holding a Quality Control Plan approved by the state DOT. A Bill of Lading (BOL) will be delivered with each transport of PG 76-22 SBS. A copy of the BOL will be furnished to the QA inspector at the Plant.

e. Post-Blended PG 76-22 modified with SBR and 5 pounds of fibers per ton of asphalt mix. This mix is recommended for large sites anticipating high wheel load (H-20) and traffic counts for maximum durability. The SBR will be supplied by a HMA plant approved to perform in-line blending or blending by injection into the pugmill. A Post-Blended SBR Binder Quality Control Plan (Table 4) will be submitted to the Engineer for approval at least 10 working days prior to production.

f. Quality control plans may be altered at the discretion of the Engineer and based on feasible testing as suggested by the asphalt producer. Certain QC testing requirements during production may not be feasible for small projects in which limited asphalt is generated. Some testing methods cannot be completed during the time needed during small batch (less than approximately 50 tons of porous asphalt mix) production. The feasibility should be assessed with the Engineer and producer.

**Table 4. Post-Blended SBR Binder QC Plan requirements.**

| The QC Plan will contain: |
|---|
| 1. Company name and address<br>2. Plant location and address<br>3. Type of Facility<br>4. Contact information for the Quality Control Plan Administrator<br>5. QC Tests to be performed on each PGAB<br>6. Name(s) of QC Testing Lab to perform QC and Process Control testing.<br>7. Actions to be taken for PG Binders and SBR in Non compliance<br>8. List of mechanical controls (requirements below)<br>9. List of process controls and documentation (requirements below) |
| List of Mechanical Controls |
| 1. Liquid SBR no-flow alert system with an "alert" located in the control room and automatic documentation of a no flow situation on the printout<br>2. Provide means of calibrating the liquid SBR metering system to a delivery tolerance of 1%.<br>3. A batching tolerance at the end of each day's production must be within 0.5% of the amount of SBR solids specified.<br>4. Mag-flow meter (other metering system may be considered)<br>5. Method of sampling liquid SBR |
| List of Process Controls and Documentation |
| 1. Printouts of liquid SBR and PG binder quantities must be synchronized within one minute of each other<br>2. SBR supplier certification showing the percent of SBR solids in liquid SBR<br>3. Test results of a lab sample blended with the specified dosage of SBR. At a minimum, provide the name of the PGAB and liquid SBR suppliers, and PGAB information such as grade and lot number, and SBR product name used for the sample.<br>4. MSDS sheet for liquid SBR<br>5. Handling, storage, and usage requirements will be followed as required by the liquid SBR manufacturer<br>6. At a minimum, provide a table showing proposed rate of SBR liquid (L/min.) in relation to HMA production rate (tons per hour, TPH) for the % solids in liquid SBR, quantity of SBR specified for HMA production, and the specific gravity of the SBR.<br>7. QCT or QC Plan Administrator must be responsible for documenting quantities, ensuring actual use is within tolerance, etc. All printouts, calculations, supplier certifications etc. must be filed and retained as part of the QCTs daily diary/reports.<br>8. Method and Frequency of testing at the HMA plant, including initial testing and specification testing. |

*This Plan shall be submitted to the Engineer 10 days before production.

3. Anti-Stripping Mix Additives.

The mix shall be tested for moisture susceptibility and asphalt stripping from the aggregate by AASHTO T283. If the retained tensile strength (TSR) < 80% upon testing, a heat stable

additive shall be furnished to improve the anti-stripping properties of the asphalt binder. Test with one freeze-thaw cycle (rather than five recommended in NAPA IS 115). The amount and type of additive (e.g. fatty amines or hydrated lime) to be used shall be based on the manufacturer's recommendations, the mix design test results, and shall be approved by the Engineer.
Silicone shall be added to the binder at the rate of 1.5 mL/m3 (1 oz. per 5000 gal).
Fibers may be added per manufacturer and NAPA IS 115 recommendation if the draindown requirement cannot be met (<0.3% via ASTM D6390) provided that the air void content requirement is met (>18%, or >16% as tested with CoreLok device).
Additives should be added per the relevant DOT specification and NAPA IS 115.

4. Coarse Aggregate.

Coarse aggregate shall be that part of the aggregate retained on the No. 8 sieve; it shall consist of clean, tough, durable fragments of crushed stone, or crushed gravel of uniform quality throughout. Coarse aggregate shall be crushed stone or crushed gravel and shall have a percentage of wear as determined by AASHTO T96 of not more than 40 percent. In the mixture, at least 75 percent, by mass (weight), of the material coarser than the 4.75 mm (No. 4) sieve shall have at least two fractured faces, and 90 percent shall have one or more fractured faces (ASTM D5821). Coarse aggregate shall be free from clay balls, organic matter, deleterious substances, and a not more than 8.0% of flat or elongated pieces (>3:1) as specified in ASTM D4791.

5. Fine Aggregate.

The fine aggregate shall be that part of the aggregate mixture passing the No. 8 sieve and shall consist of sand, screenings, or combination thereof with uniform quality throughout. Fine aggregate shall consist of durable particles, free from injurious foreign matter. Screenings shall be of the same or similar materials as specified for coarse aggregate. The plasticity index of that part of the fine aggregate passing the No. 40 sieve shall be not more than 6 when tested in accordance with AASHTO T90. Fine aggregate from the total mixture shall meet plasticity requirements.

6. Porous Asphalt Mix Design Criteria.

The Contractor shall submit a mix design at least 10 working days prior to the beginning of production. The Contractor shall make available samples of coarse aggregate, fine aggregate, mineral filler, fibers and a sample of the PGAB that will be used in the design of the mixture. A certificate of analysis (COA) of the PGAB will be submitted with the mix design. The COA will be certified by a laboratory meeting the requirements of AASHTO R18. The Laboratory will be certified by the state DOT, regional equivalent (e.g. NETTCP), and/or qualified under ASTM D3666. Technicians will be certified by the regional certification agency (e.g. NETTCP) in the discipline of HMA Plant Technician.

Bulk specific gravity (SG) used in air void content calculations shall not be determined and results will not be accepted using AASHTO T166 (saturated surface dry), since it is not intended for open graded specimens (>10% AV). Bulk SG shall be calculated using AASHTO T275 (paraffin wax) or ASTM D6752 (automatic vacuum sealing, e.g. CoreLok). Air void content shall be calculated from the bulk SG and maximum theoretical SG (AASHTO T209) using ASTM D3203.

The materials shall be combined and graded to meet the composition limits by mass (weight) as shown in Table 5.

**Table 5: Porous Asphalt Mix Design Criteria.**

| Sieve Size (inch/mm) | Percent Passing (%) |
|---|---|
| 0.75/19 | 100 |
| 0.50/12.5 | 85-100 |
| 0.375/9.5 | 55-75 |
| No.4/4.75 | 10-25 |
| No.8/2.36 | 5-10 |
| No.200/0.075 (#200) | 2-4 |
| Binder Content (AASHTO T164) | 6 - 6.5% |
| Fiber Content by Total Mixture Mass | 0.3% cellulose or 0.4% mineral |
| Rubber Solids (SBR) Content by Weight of the Bitumen | 1.5-3% or TBD |
| Air Void Content (ASTM D6752/AASHTO T275) | 16.0-22.0% |
| Draindown (ASTM D6390)* | $\leq$ 0.3 % |
| Retained Tensile Strength (AASHTO 283)** | $\geq$ 80 % |
| Cantabro abrasion test on unaged samples (ASTM D7064-04) | $\leq$ 20% |
| Cantabro abrasion test on 7 day aged samples | $\leq$ 30% |

*Cellulose or mineral fibers may be used to reduce draindown.
**If the TSR (retained tensile strength) values fall below 80% when tested per NAPA IS 131 (with a single freeze thaw cycle rather than 5), then in Step 4, the contractor shall employ an antistrip additive, such as hydrated lime (ASTM C977) or a fatty amine, to raise the TSR value above 80%.

## C. Porous Asphalt Mix Production

1. Mixing Plants.
Mixing plants shall meet the requirements of hot mix asphalt plants as specified in the state DOT or regional equivalent unless otherwise approved by the Engineer (e.g. Section 401-Plant Mix Pavements – General for Quality Assurance specifications in the Standard Specifications for Road and Bridge Construction – State of New Hampshire DOT, 2006, or latest revised edition and including supplemental specifications and updates).

2. Preparation of Asphalt Binder.
The asphalt material shall be heated to the temperature specified in the state DOT specification (if using a DOT spec for the mix) in a manner that will avoid local overheating. A continuous supply of asphalt material shall be furnished to the mixer at a uniform temperature.

3. Preparation of Aggregates.
   The aggregate for the mixture shall be dried and heated at the mixing plant before being placed in the mixer. Flames used for drying and heating shall be properly adjusted to avoid damaging the aggregate and depositing soot or unburned fuel on the aggregate.

4. Mineral filler
   Mineral filler if required to meet the grading requirements, shall be added in a manner approved by the Engineer after the aggregates have passed through the dryer.

5. Mixing.
   The above preparation of aggregates does not apply for drum-mix plants. The dried aggregate shall be combined in the mixer in the amount of each fraction of aggregate required to meet the job-mix formula and thoroughly mixed prior to adding the asphalt material.

   The dried aggregates shall be combined with the asphalt material in such a manner as to produce a mixture that when discharged from the pugmill is at a target temperature in the range that corresponds to an asphalt binder viscosity of 700 to 900 centistokes and within a tolerance of ± 11 °C (± 20 °F).

   The asphalt material shall be measured or gauged and introduced into the mixer in the quantity determined by the Engineer for the particular material being used and at the temperature specified in the relevant specification.

   After the required quantity of aggregate and asphalt material has been introduced into the mixer, the materials shall be mixed until a complete and uniform coating of the particles and a thorough distribution of the asphalt material throughout the aggregate is secured. The mixing time will be regulated by the Engineer.

   All plants shall have a positive means of eliminating oversized and foreign material from being incorporated into the mixer.

6. QC/QA During Production
   The Contractor shall provide at Contractors' expense and the Engineer's approval a third-party QA Inspector to oversee and document mix production. All mix testing results during production should be submitted to the QA Inspector.

   The QC plan may be altered at the discretion of the Engineer and based on feasible testing as suggested by the asphalt producer. Certain QC testing requirements during production may not be feasible for small projects in which limited asphalt is generated. Some testing methods cannot be completed during the time needed during small batch production. The feasibility should be assessed with the Engineer and producer.

   The mixing plant shall employ a Quality Control Technician (QCT). The QCT will perform QC/QA testing and will be certified in the discipline of HMA Plant Technician by the relevant certifying agency (e.g. NETTCP in New England). The Contractor shall sample, test and evaluate the mix in accordance with the methods and minimum frequencies in Table 6 and the

Post-Blended SBR Binder Quality Control Plan (if applicable).

**Table 6. QC/QA testing requirements during production.**

| Test | Min. Frequency | Test Method |
|---|---|---|
| Temperature in Truck at Plant | 6 times per day | |
| Gradation | greater of either (a) 1 per 500 tons, (b) 2 per day, or (c) 3 per job | AASHTO T30 |
| Binder Content | greater of either (a) 1 per 500 tons, (b) 2 per day, or (c) 3 per job | AASHTO T164 |
| Air Void Content | greater of either (a) 1 per 500 tons, (b) 2 per day, or (c) 3 per job | ASTM D6752 |
| Binder Draindown | greater of either (a) 1 per 500 tons, (b) 1 per day, or (c) 1 per job | ASTM D6390 |

If an analyzed sample is outside the testing tolerances immediate corrective action will be taken. After the corrective action has been taken the resulting mix will be sampled and tested. If the re-sampled mix test values are outside the tolerances the Engineer will be immediately informed. The Engineer may determine that it is in the best interest of project that production is ceased. The Contractor will be responsible for all mix produced for the project.

Testing Tolerances During Production. Testing of the air void content, binder draindown, and TSR shall be within the limits set in Table 6. The paving mixture produced should not vary from the design criteria for aggregate gradation and binder content by more than the tolerances in Table 7.

**Table 7. QC/QA testing tolerances during production.**

| Sieve Size (inch/mm) | Percent Passing |
|---|---|
| 0.75/19 | - |
| 0.50/12.5 | ±6.0 |
| 0.375/9.5 | ±6.0 |
| No.4/4.75 | ±5.0 |
| No.8/2.36 | ±4.0 |
| No.200/0.075 (#200) | ±2.0 |
| %PGAB | +0.4, -0.2 |

Should the paving mixture produced vary from the designated grading and asphalt content by more than the above tolerances, the appropriate production modifications are to be made until the porous asphalt mix is within these tolerances.

Samples of the mixture, when tested in accordance with AASHTO T164 and T30, shall not vary from the grading proportions of the aggregate and binder content designated by the Engineer by more than the respective tolerances specified above and shall be within the limits specified for the design gradation.

7. Plant Shutdown and Rejection of Mix.

Should the porous asphalt mix not meet the tolerances specified in this section upon repeat testing, the Engineer may reject further loads of mix. Mix that is loaded into trucks during the

time that the plant is changing operations to comply with a failed test shall not be accepted, and should be recycled at the plant.

8. Striping Paint

Striping paint shall be latex, water-base emulsion, ready-mixed, and complying with pavement marking specifications PS TT-P-1952.

## PART 3 EXECUTION

### 3.1 INSTALLATION

A. **Porous Media Beds**

Protection of native materials from over compaction is important. Proper compaction of select subbase materials is essential. Improper compaction of subbase materials will result in either 1) low pavement durability from insufficient compaction, or 2) poor infiltration due to over-compaction of subbase. Care must be taken to assure proper compaction as detailed below.

1. Grade Control

   a. Establish and maintain required lines and elevations. The Engineer shall be notified for review and approval of final stake lines for the work before construction work is to begin. Finished surfaces shall be true to grade and even, free of roller marks and free of puddle-forming low spots. All areas must drain freely. Excavation elevations should be within +/- 0.1 ft (+/- 3 cm).

   b. If, in the opinion of the Engineer, based upon reports of the testing service and inspection, the quality of the work is below the standards which have been specified, additional work and testing will be required until satisfactory results are obtained.

   c. The Engineer shall be notified at least 24 hours prior to all porous media bed and porous pavement work.

2. Subgrade Preparation

   a. Native subgrade refers to materials beyond the limit of the excavation. The existing native subgrade material under all bed areas shall NOT be compacted or subject to excessive construction equipment traffic prior to geotextile and stone bed placement. Compaction is acceptable if an impermeable liner is used at the base of the porous asphalt system and infiltration is not desired.

   b. Where erosion of the native material subgrade has caused accumulation of fine materials and/or surface ponding, this material shall be removed with light equipment and the underlying soils scarified to a minimum depth of 6 inches with a York rake or equivalent and light tractor.

   c. Bring subgrade to line, grade, and elevations indicated. Fill and lightly regrade any areas

damaged by erosion, ponding, or traffic compaction before the placing of the stone subbase.

d. All bed bottoms are as level as feasible to promote uniform infiltration. For pavements subbases constructed on grade, soil or fabric barriers should be constructed along equal elevation for every 6-12” of grade change to act as internal check dams. This will prevent erosion within the subbase on slope.

3. Porous Media Bed Installation

a. Subbase refers to materials below pavement surface and above native subgrade. Upon completion of subgrade work, the Engineer shall be notified and shall inspect at his/her discretion before proceeding with the porous media bed installation.

b. Sideslope geotextile and porous media bed aggregate shall be placed immediately after approval of subgrade preparation. Any accumulation of debris or sediment which has taken place after approval of subgrade shall be removed prior to installation of geotextile at no extra cost to the Owner.

c. Place sideslope geotextile in accordance with manufacturer's standards and recommendations. Adjacent strips of geotextile shall overlap a minimum of sixteen inches (16"). Secure geotextile at least four feet (1.2 m) outside of the bed excavation and take any steps necessary to prevent any runoff or sediment from entering the storage bed.

d. Install filter course aggregate in 8-inch maximum lifts to a MAXIMUM of 95% standard proctor compaction (ASTM D698 / AASHTO T99). Install aggregate to grades indicated on the drawings.

e. Install choker, gravel, and stone base course aggregate to a MAXIMUM of 95% compaction standard proctor (ASTM D698 / AASHTO T99). Choker should be placed evenly over surface of filter course bed, sufficient to allow placement of pavement, and notify Engineer for approval. Choker base course thickness shall be sufficient to allow for even placement of the porous asphalt but no less than 4-inches (10 cm) in depth.

f. The density of subbase courses shall be determined by AASHTO T 191 (Sand-Cone Method), AASHTO T 204 (Drive Cylinder Method), or AASHTO T 238 (Nuclear Methods), or other approved methods at the discretion of the supervising engineer.

g. The infiltration rate of the compacted subbase shall be determined by ASTM D3385 or approved alternate at the discretion of the supervising engineer. The infiltration rate shall be no less 5-30 ft/day or 50% of the hydraulic conductivity (D2434) at 95% standard proctor compaction (refer to section 2.1.A.5).

h. Compaction of subbase course material shall be done with a method and adequate water to meet the requirements. Rolling and shaping shall continue until the required density is attained. Water shall be uniformly applied over the subbase course materials during compaction in the amount necessary for proper consolidation.

i. Rolling and shaping patterns shall begin on the lower side and progress to the higher side of the subbase course while lapping the roller passes parallel to the centerline. Rolling and shaping shall continue until each layer conforms to the required grade and cross-section and the surface is smooth and uniform.

j. Following placement of subbase aggregate, the sideslope geotextile shall be folded back along all bed edges to protect from sediment washout along bed edges. At least a four-foot edge strip shall be used to protect beds from adjacent bare soil. This edge strip shall remain in place until all bare soils contiguous to beds are stabilized and vegetated. In addition, take any other necessary steps to prevent sediment from washing into beds during site development. When the site is fully stabilized, temporary sediment control devices shall be removed.

4. QC/QA requirements for Porous Media Bed Construction.
QC/QA activities are summarized in **Table 8**.

## B. Porous Asphalt Pavement Installation

1. Mixing Plant
The mixing plant, hauling and placing equipment, and construction methods shall be in conformance with NAPA IS 131 and applicable sections of the state DOT's specification for asphalt mixes. The use of surge bins shall not be permitted.

**Table 8. QC/QA requirements for porous media bed construction.**

| Activity | Schedule |
|---|---|
| Contractor to notify Engineer for approval | 24 hours in advance of start of work |
| Contractor to employ soil inspector acceptable to Engineer | NA |
| Contractor to employ staking and layout control inspector acceptable to Engineer | NA |
| Contractor to employ site grading inspector acceptable to Engineer | NA |
| Contractor to employ pavement work inspector acceptable to Engineer | NA |
| Contractor to notify Engineer for approval | after subgrade preparation, before construction of porous media bed |
| Contractor to notify Engineer for approval | after choker course placed, before placement of pavement |

2. Hauling Equipment.
The open graded mix shall be transported in clean vehicles with tight, smooth dump beds that have been sprayed with a non-petroleum release agent or soap solution to prevent the mixture from adhering to the dump bodies. Mineral filler, fine aggregate, slag dust, etc.

shall not be used to dust truck beds. The open graded mix shall be covered during transportation with a suitable material of such size sufficient to protect the mix from the weather and also minimize mix cooling and the prevention of lumps. When necessary, to ensure the delivery of material at the specified temperature, truck bodies shall be insulated, and covers shall be securely fastened. Long hauls, particularly those in excess of 25 miles (40 km), may result in separation of the mix and its rejection.

3. Placing Equipment.

The paver shall be a self-propelled unit with an activated screed or strike-off assembly, capable of being heated if necessary, and capable of spreading and finishing the mixture without segregation for the widths and thicknesses required. In general, track pavers have proved superior for Porous Asphalt placement. The screed shall be adjustable to provide the desired cross-sectional shape. The finished surface shall be of uniform texture and evenness and shall not show any indication of tearing, shoving, or pulling of the mixture. The machine shall, at all times, be in good mechanical condition and shall be operated by competent personnel.

Pavers shall be equipped with the necessary attachments, designed to operate electronically, for controlling the grade of the finished surface.

The adjustments and attachments of the paver will be checked and approved by the Engineer before placement of asphalt material.

Pavers shall be equipped with a sloped plate to produce a tapered edge at longitudinal joints. The sloped plate shall be attached to the paver screed extension.

The sloped plate shall produce a tapered edge having a face slope of 1:3 (vertical: horizontal). The plate shall be so constructed as to accommodate compacted mat thickness from 35 to 100 mm (1 1/4 to 4 inches). The bottom of the sloped plate shall be mounted 10 to 15 mm (3/8 to 1/2 inch) above the existing pavement. The plate shall be interchangeable on either side of the screed.

Pavers shall also be equipped with a joint heater capable of heating the longitudinal edge of the previously placed mat to a surface temperature of 95 °C (200 °F), or higher if necessary, to achieve bonding of the newly placed mat with the previously placed mat. This shall be done without undue breaking or fracturing of aggregate at the interface. The surface temperature shall be measured immediately behind the joint heater. The joint heater shall be equipped with automated controls that shut off the burners when the pavement machine stops and reignite them with the forward movement of the paver. The joint heater shall heat the entire area of the previously placed wedge to the required temperature. Heating shall immediately precede placement of the asphalt material.

4. Rollers.

Rollers shall be in good mechanical condition, operated by competent personnel, capable of reversing without backlash, and operated at speeds slow enough to avoid displacement of the asphalt mixture. The mass (weight) of the rollers shall be sufficient to compact the mixture to the required density without crushing of the aggregate. Rollers shall be

equipped with tanks and sprinkling bars for wetting the rolls.

Rollers shall be two-axle tandem rollers with a gross mass (weight) of not less than 7 metric tons (8 tons) and not more than 10 metric tons (12 tons) and shall be capable of providing a minimum compactive effort of 44 kN/m (250 pounds per inch) of width of the drive roll. All rolls shall be at least 1 m (42 inches) in diameter.

A rubber tired roller will not be required on the open graded asphalt friction course surface.

5. Conditioning of Existing Surface.
Contact surfaces such as curbing, gutters, and manholes shall be painted with a thin, uniform coat of Type RS-1 emulsified asphalt immediately before the asphalt mixture is placed against them.

6. Temperature Requirements.
The temperature of the asphalt mixture, at the time of discharge from the haul vehicle and at the paver, shall be between 135-163°C (275 to 325°F), within 6 °C (10 °F) of the compaction temperature for the approved mix design.

7. Spreading and Finishing.
The Porous Asphalt shall be placed either in a single application at 4 inches (10 cm) thick or in two lifts. If more than one lift is used, great care must be taken to insure that the porous asphalt layer join completely. This means: keeping the time between layer placements minimal; keeping the first layer clear from dust and moisture, and minimizing traffic on the first layer.

The Contractor shall protect all exposed surfaces that are not to be treated from damage during all phases of the pavement operation.

The asphalt mixture shall be spread and finished with the specified equipment. The mixture shall be struck off in a uniform layer to the full width required and of such depth that each course, when compacted, has the required thickness and conforms to the grade and elevation specified. Pavers shall be used to distribute the mixture over the entire width or over such partial width as practical. On areas where irregularities or unavoidable obstacles make the use of mechanical spreading and finishing equipment impractical, the mixture shall be spread and raked by hand tools.

No material shall be produced so late in the day as to prohibit the completion of spreading and compaction of the mixture during daylight hours, unless night paving has been approved for the project.

No traffic will be permitted on material placed until the material has been thoroughly compacted and has been permitted to cool to below 38 °C (100 °F). The use of water to cool the pavement is not permitted. The Engineer reserves the right to require that all work adjacent to the pavement, such as guardrail, cleanup, and turf establishment, is completed prior to placing the wearing course when this work could cause damage to the pavement. On projects where traffic is to be maintained, the Contractor shall schedule daily pavement

operations so that at the end of each working day all travel lanes of the roadway on which work is being performed are paved to the same limits. Suitable aprons to transition approaches, where required, shall be placed at side road intersections and driveways as directed by the Engineer.

8. Compaction.

Immediately after the asphalt mixture has been spread, struck off, and surface irregularities adjusted, it shall be thoroughly and uniformly compacted by rolling. The compaction objective is 16% - 19% in place void content (Corelock).

Breakdown rolling shall occur when the mix temperature is between 135-163°C (275 to 325°F).

Intermediate rolling shall occur when the mix temperature is between 93-135°C (200 to 275°F).

Finish rolling shall occur when the mix temperature is between 66-93°C (150 to 200°F).

The cessation temperature occurs at approximately 79°C (175°F), at which point the mix becomes resistant to compaction. If compaction has not been done at temperatures greater than the cessation temperature, the pavement will not achieve adequate durability.

The surface shall be rolled when the mixture is in the proper condition and when the rolling does not cause undue displacement, cracking, or shoving.

Rollers or oscillating vibratory rollers, ranging from 8-12 tons, shall be used for compaction. The number, mass (weight), and type of rollers furnished shall be sufficient to obtain the required compaction while the mixture is in a workable condition. Generally, one breakdown roller will be needed for each paver used in the spreading operation.

To prevent adhesion of the mixture to the rolls, rolls shall be kept moist with water or water mixed with very small quantities of detergent or other approved material. Excess liquid will not be permitted.

Along forms, curbs, headers, walls, and other places not accessible to the rollers, the mixture shall be thoroughly compacted with hot or lightly oiled hand tampers, smoothing irons or with mechanical tampers. On depressed areas, either a trench roller or cleated compression strips may be used under the roller to transmit compression to the depressed area.

Other combinations of rollers and/or methods of compacting may be used if approved in writing by the Engineer, provided the compaction requirements are met.

Unless otherwise specified, the longitudinal joints shall be rolled first. Next, the Contractor shall begin rolling at the low side of the pavement and shall proceed towards the center or high side with lapped rollings parallel to the centerline. The speed of the roller shall be slow and uniform to avoid displacement of the mixture, and the roller should

be kept in as continuous operation as practical. Rolling shall continue until all roller marks and ridges have been eliminated.

Rollers will not be stopped or parked on the freshly placed mat.

It shall be the responsibility of the Contractor to conduct whatever process control the Contractor deems necessary. Acceptance testing will be conducted by the Engineer using cores provided by the Contractor.

Any mixture that becomes loose and broken, mixed with dirt, or is in any way defective shall be removed and replaced with fresh hot mixture. The mixture shall be compacted to conform to the surrounding area. Any area showing an excess or deficiency of binder shall be removed and replaced. These replacements shall be at the Contractor's expense.

If the Engineer determines that unsatisfactory compaction or surface distortion is being obtained or damage to highway components and/or adjacent property is occurring using vibratory compaction equipment, the Contractor shall immediately cease using this equipment and proceed with the work in accordance with the fifth paragraph of this subsection.

The Contractor assumes full responsibility for the cost of repairing all damages that may occur to roadway or parking lot components and adjacent property if vibratory compaction equipment is used. After final rolling, no vehicular traffic of any kind shall be permitted on the surface until cooling and hardening has taken place, and in no case within the first 48 hours. For small batch jobs, curing can be considered to have occurred after the surface temperature is less than 100 ºF (38 ºC). Curing time is preferably one week, or until the entire surface temperature cools below 100 ºF (38 ºC). Provide barriers as necessary at no extra cost to the Owner to prevent vehicular use; remove at the discretion of the Engineer.

9. Joints.

Joints between old and new pavements or between successive day's work shall be made to ensure a thorough and continuous bond between the old and new mixtures. Whenever the spreading process is interrupted long enough for the mixture to attain its initial stability, the paver shall be removed from the mat and a joint constructed.

Butt joints shall be formed by cutting the pavement in a vertical plane at right angles to the centerline, at locations approved by the Engineer. The Engineer will determine locations by using a straightedge at least 4.9 m (16 feet) long. The butt joint shall be thoroughly coated with Type RS-1 emulsified asphalt just prior to depositing the pavement mixture when pavement resumes.

Tapered joints shall be formed by tapering the last 450 to 600 mm (18 to 24 inches) of the course being laid to match the lower surface. Care shall be taken in raking out and discarding the coarser aggregate at the low end of the taper, and in rolling the taper. The taper area shall be thoroughly coated with Type RS-1 emulsified asphalt just prior to resuming pavement. As the paver places new mixture on the taper area, an evenly

graduated deposit of mixture shall complement the previously made taper. Shovels may be used to add additional mixture if necessary. The joint shall be smoothed with a rake, coarse material discarded, and properly rolled.

Longitudinal joints that have become cold shall be coated with Type RS-1 emulsified asphalt before the adjacent mat is placed. If directed by the Engineer, joints shall be cut back to a clean vertical edge prior to applying the emulsion.

10. Surface Tolerances.
The surface will be tested by the Engineer using a straightedge at least 4.9 m (16 feet) in length at selected locations parallel with the centerline. Any variations exceeding 3 mm (1/8 inch) between any two contact points shall be satisfactorily eliminated. A straightedge at least 3 m (10 feet) in length may be used on a vertical curve. The straightedges shall be provided by the Contractor.

Work shall be done expertly throughout, without staining or injury to other work. Transition to adjacent impervious asphalt pavement shall be merged neatly with flush, clean line. Finished pavement shall be even, without pockets, and graded to elevations shown on drawing.

Porous pavement beds shall not be used for equipment or materials storage during construction, and under no circumstances shall vehicles be allowed to deposit soil on paved porous surfaces.

11. Repair of Damaged Pavement.
Any existing pavement on or adjacent to the site that has been damaged as a result of construction work shall be repaired to the satisfaction of the Engineer without additional cost to the Owner.

12. Striping Paint

Vacuum and clean surface to eliminate loose material and dust.

Paint 4 inch wide parking striping and traffic lane striping in accordance with layouts of plan. Apply paint with mechanical equipment to produce uniform straight edges. Apply in two coats at manufacturer's recommended rates. Provide clear, sharp lines using white traffic paint

Color for Handicapped Markings: Blue

## C. QC/QA for Paving Operations

1. The full permeability of the pavement surface shall be tested by application of clean water at the rate of at least 5 gpm (23 lpm) over the surface, using a hose or other distribution devise. Water used for the test shall be clean, free of suspended solids and deleterious liquids and will

be provided at no extra cost to the Owner. All applied water shall infiltrate directly without large puddle formation or surface runoff, and shall be observed by the Engineer.

2. Testing and Inspection: Employ at Contractor's expense an inspection firm acceptable to the Engineer to perform soil inspection services, staking and layout control, and testing and inspection of site grading and pavement work. Inspection and list of tests shall be reviewed and approved in writing by the Engineer prior to starting construction. All test reports must be signed by a licensed Engineer.
3. Test in-place base and surface course for compliance with requirements for thickness and surface smoothness. Repair or remove and replace unacceptable work as directed by the Engineer.
4. Surface Smoothness: Test finished surface for smoothness using a 10 foot straightedge applied parallel with and at right angles to the centerline of the paved area. Surface will not be accepted if gaps or ridges exceed 3/16 of an inch.
5. QC/QA requirements during paving are summarized in **Error! Reference source not found.**.

**Table 9. QC/QA requirements during paving.**

| Activity | Schedule/ Frequency | Tolerance |
|---|---|---|
| Inspect truck beds for pooling (draindown) | every truck | NA |
| Take surface temp. behind joint heater | each pull | 6°C (10°F) of compaction temp |
| Consult with Engineer to determine locations of butt joints | as needed | NA |
| Test surface smoothness & positive drainage with a 10 ft straightedge | after compaction | 4.5 mm (3/16") |
| Consult with Engineer to mark core locations for QA testing | after compaction | NA |
| Hose test with at least 5 gpm water | after compaction | immediate infiltation, no puddling |

## PART 4. REFERENCES


CalTrans, January 2003, California Stormwater BMP Handbook 3 of 8 New Development and Redevelopment, California Dept. of Transportation, Sacramento, CA www.cabmphandbooks.com

USEPA, September, 1999, Storm Water Technology Fact Sheet: Infiltration Drainfields, Number: 832F99018 USEPA, Office of Water, Washington, DC http://www.epa.gov/npdes/pubs/infltdrn.pdf

USEPA, September 2004, Stormwater Best Management Design Guide: Volume 1 General Considerations, Office of Research and Development, EPA/600/R-04/121, Washington, D.C.

Vermont Agency of Transportation, 2006, 2006 Standard Specifications for Construction Book, Division 700, Section 708, Montpelier, VT.

http://www.aot.state.vt.us/conadmin/2006StandardSpecs.htm

Wisconsin Department of Natural Resources, Feb. 2004, Site Evaluation for Stormwater Infiltration(1002), Wisconsin Department of Natural Resources Conservation Practice Standards Madison, WI